Newland AIDC

SCANNING MADE SIMPLE



EM2037 V5

Scan Engines

Version: V1.0.0

User Guide

Disclaimer

© 2023 Newland Europe BV. All rights reserved.

Please read the manual carefully before using the product and operate it according to the manual. It is advised that you keep this manual for future reference.

Do not disassemble the device or remove the seal label from the device; doing so will void the product warranty provided by Newland Europe BV.

All pictures in this manual are for reference only, and the actual product may differ.

Regarding product modification and update, Newland Europe BV reserves the right to make changes to any software or hardware to improve reliability, function, or design at any time without notice. The information contained herein is subject to change without prior notice.

The products depicted in this manual may include software copyrighted by Newland Europe BV or a third party. The user, corporation or individual shall not duplicate, in whole or in part, distribute, modify, decompile, disassemble, decode, reverse engineer, rent, transfer, or sublicense such software without prior written consent from the copyright holders.

This manual is copyrighted. No part of this publication may be reproduced, distributed, or used in any form without Newland Europe BV's written permission.

Risk Warning Regarding Unauthorized System Updates:
You should use the Newland-provided tool to update this product's system. Modifying system files by installing a third-party ROM system or using any cracking method may result in product malfunction or data loss and void your warranty.

Newland Europe BV reserves the right to make a final interpretation of the statement above.

Newland Europe BV

Rolweg 25, 4104 AV, Culemborg,
The Netherlands
www.newland-id.com

Newland Europe BV is a subsidiary of Newland Digital Technology Co., Ltd. Our general conditions of Purchase, Sale and Delivery are filed with the Record Office of the Chamber of Commerce of Utrecht, The Netherlands.

K.v.K. H.R. Utrecht / Chamber of Commerce Utrecht: Reg. nr. 17109876

Revision History

Version	Description	Date
V1.0.0	Initial release.	July 21, 2026

Table of Contents

Preface **1**

Introduction 1
Chapter Description 1
Explanation of Symbols 3
Explanation of Icons 3

Chapter 1 Getting Started **4**

Introduction 4
Symbologies 5
Features of the EM2037 5
Module 6

Chapter 2 Installation **7**

Introduction 7
Mounting 7
Dimensions (unit: mm) 7
Mechanical Dimensions (Unit: mm) 8
Mechanical Mounting Dimensions for the Imager of EM2037 V5 (Unit: mm) 10
Mechanical Mounting Dimensions for the Imager of EM2037 (Unit: mm) 12
Interface Pinouts 14
Connector Specifications 15
12-pin FPC Connector 15
12-pin FFC Cable 16
8-pin Dupont Connector 16
General Requirements 17
ESD 17
Dust and Dirt 17
Ambient Environment 17
Thermal Considerations 17
Maintenance 18

Chapter 3 Optics **19**

Window Placement 19
Window Material and Color 20
Coatings and Scratch Resistance 20
Window Size 21
Ambient Light 24

Eye Safety 24
Depth of Field 25
Chapter 4 Electrical Specifications 26
Power Supply 26
Ripple Noise 26
Interface Pinouts 27
DC Characteristics 30
Operating Voltage 30
Operating Current 31
I/O Voltage 31
Timing Sequence 32
Power Up and Power Down Timing Sequence 32
Chapter 5 External Reference Circuit 33
External Circuit Design 33
Good Read LED Circuit 33
Beeper Circuit 34
Trigger Circuit 35
External Lgiht Control Circuit 36
Chapter 6 Auxiliary Tools 37
EVK 37
EasySet 37
UFCOM 38
Chapter 7 Configuration 39
Introduction 39
Barcode Programming 39
Command Programming 39
EasySet Programming 39
Programming Barcode/ Programming Command/Function 40
Use of Programming Barcodes 41
Default Settings 42
Factory Defaults 42
Custom Defaults 42
Query Product Information 43
Query Product Name 43
Query Firmware Version 43
Query Decoder Version 44

Query Hardware Version 44
Query Product Serial Number 44
Query Manufacturing Date 45
Query OEM Serial Number 45
Query Data Formatter Version 45
Chapter 8 Communication Interface 46
Introduction 46
Adaptive Wired Communication 47
RS-232 Interface 48
Baud Rate 49
Parity Check 50
Data Bit 51
Stop Bit 51
Hardware Auto Flow Control 52
USB HID Keyboard 53
USB Country Keyboard Types 54
Beep on Unknown Character 58
Emulate ALT+Keypad 59
Code Page 60
Unicode Encoding 62
Emulate Keypad with Leading Zero 62
Function Key Mapping 63
ASCII Function Key Mapping Table 64
ASCII Function Key Mapping Table (Continued) 65
Inter-Keystroke Delay 66
Caps Lock 67
Convert Case 68
Emulate Numeric Keypad 69
Fast Mode 71
Polling Rate 72
Remove UTF-8 Byte Order Mark (BOM) 74
USB CDC 75
HID POS (POS HID Barcode Scanner) 76
Introduction 76
Access the Engine with Your Program 76
Acquire Scanned Data 77
Send Command to the Engine 77

IBM SurePOS (Tabletop) 78
IBM SurePOS (Handheld) 78
VID/PID 78
Datalogic Magellan Aux-RS232 79
Chapter 9 System Settings 81
Scan Mode 81
Decode Session Timeout 83
Enter the Detection/ Reading State (Sense Mode) 84
Image Stabilization Timeout (Sense Mode) 85
Image Change Trigger Sensitivity 86
Reread Timeout 87
Good Read Delay 89
Scanning Preference 90
Decoding Preference 91
Decode Area 92
Image Flipping 95
Bad Read Message 96
Set Bad Read Message 97
Trigger Commands 98
Modify Start Scanning Command 98
Modify Stop Scanning Command 99
Illumination 100
Illumination Source Combination 100
External Illumination Pins 103
External Illumination Pin 1 Polarity 103
External Illumination Pin 2 Polarity 104
External Illumination Pin 3 Polarity 104
Aiming 105
Good Read LED 106
Good Read LED Duration 107
Good Read LED Control Logic 108
Power On Beep 108
Good Read Beep 109
Good Read Beep Duration 110
Good Read Beep Frequency 111
Good Read Beep Volume 112
Good Read Vibration 113

Good Read Vibration Duration 113
Chapter 10 Symbologies 114
Introduction 114
Global Settings 114
Enable/Disable All Symbologies 114
Enable/Disable 1D Symbologies 115
Enable/Disable 2D Symbologies 115
Enable/Disable Postal Symbologies 115
Inverse Code 116
Multi-barcode 117
Multi-Barcode Reading Preference 118
Minimum Total Number of Decoders 119
Maximum Total Number of Decoders 120
Multi-barcode Separator 121
GS1 2D Barcode Transition 122
GS1 Digital Link URI 123
Surround GS1 Application Identifiers (AI's) with Parentheses 124
Output GS1 Application Identifier (GS1 AIs) 125
Output GS1 Check Character 128
Code 128 129
Restore Factory Defaults 129
Enable/Disable Code 128 129
Set Length Range for Code 128 130
Queit Size 131
Security Level 132
EAN-8 133
Restore Factory Defaults 133
Enable/Disable EAN-8 133
Transmit Check Character 134
2-Digit Add-On Code 135
5-Digit Add-On Code 136
Add-On Code Required 137
Convert EAN-8 to EAN-13 137
Security Level 138
EAN-13 139
Restore Factory Defaults 139
Enable/Disable EAN-13 139

Transmit Check Character 140
2-Digit Add-On Code 140
5-Digit Add-On Code 141
Add-On Code Required 141
EAN-13 Beginning with 290 Add-On Code Required 142
EAN-13 Beginning with 378/379 Add-On Code Required 142
EAN-13 Beginning with 414/419 Add-On Code Required 143
EAN-13 Beginning with 434/439 Add-On Code Required 143
EAN-13 Beginning with 977 Add-On Code Required 144
EAN-13 Beginning with 978 Add-On Code Required 144
EAN-13 Beginning with 979 Add-On Code Required 145
Queit Size 146
Security Level 147
UPC-E 148
Restore Factory Defaults 148
Enable/Disable UPC-E 148
Transmit Check Character 149
2-Digit Add-On Code 149
5-Digit Add-On Code 150
Add-On Code Required 150
Transmit Preamble Character 151
Convert UPC-E to UPC-A 151
Security Level 152
UPC-A 153
Restore Factory Defaults 153
Enable/Disable UPC-A 153
Transmit Check Character 153
2-Digit Add-On Code 154
5-Digit Add-On Code 155
Add-On Code Required 156
Transmit Preamble Character 156
Security Level 157
Coupon 158
UPC-A/EAN-13 with Extended Coupon Code 158
Coupon GS1 Databar Output 159
Interleaved 2 of 5 160
Restore Factory Defaults 160
Enable/Disable Interleaved 2 of 5 160

Set Length Range for Interleaved 2 of 5 161
Check Character Verification 162
Febraban 163
Disable/Enable Febraban 163
Transmit Delay per Character 163
Transmit Delay per 12 Characters 166
Queit Size 168
Security Level 169
ITF-14 170
Restore Factory Defaults 170
Enable/Disable ITF-14 170
Security Level 171
ITF-6 172
Restore Factory Defaults 172
Enable/Disable ITF-6 172
Security Level 173
Matrix 2 of 5 174
Restore Factory Defaults 174
Enable/Disable Matrix 2 of 5 174
Set Length Range for Matrix 2 of 5 175
Check Character Verification 176
Security Level 177
Code 39 178
Restore Factory Defaults 178
Enable/Disable Code 39 178
Set Length Range for Code 39 179
Check Character Verification 180
Transmit Start/Stop Character 181
Enable/Disable Code 39 Full ASCII 181
Queit Size 182
Security Level 183
Enable/Disable Code 32 (Italian Pharma Code) 184
Code 32 Prefix 184
Transmit Code 32 Start/Stop Character 185
Transmit Code 32 Check Character 185
Codabar 186
Restore Factory Defaults 186
Enable/Disable Codabar 186

Set Length Range for Codabar 187
Check Character Verification 188
Start/Stop Character 189
Queit Size 190
Security Level 191
Code 93 192
Restore Factory Defaults 192
Enable/Disable Code 93 192
Set Length Range for Code 93 193
Check Character Verification 194
Queit Size 195
Security Level 196
China Post 25 197
Restore Factory Defaults 197
Enable/Disable China Post 25 197
Set Length Range for China Post 25 198
Check Character Verification 199
Security Level 200
GS1-128 (UCC/EAN-128) 201
Restore Factory Defaults 201
Enable/Disable GS1-128 201
Set Length Range for GS1-128 202
Transmit Check Character 203
FNC1 Transmit 203
Security Level 204
GS1 Databar (RSS) 205
Restore Factory Defaults 205
Enable/Disable GS1 Databar 205
Transmit Application Identifier “01” 205
Security Level 206
GS1 Composite (EAN·UCC Composite) 207
Restore Factory Defaults 207
Enable/Disable GS1 Composite 207
Enable/Disable UPC/EAN Composite 207
Only Output 1D Barcode Data 208
Security Level 209
Code 11 210
Restore Factory Defaults 210

Enable/Disable Code 11 210
Set Length Range for Code 11 211
Check Character Verification 212
Transmit Check Character 213
Security Level 214
ISBN 215
Restore Factory Defaults 215
Enable/Disable ISBN 215
Set ISBN Format 216
Security Level 217
ISSN 218
Restore Factory Defaults 218
Enable/Disable ISSN 218
Security Level 219
Industrial 25 220
Restore Factory Defaults 220
Enable/Disable Industrial 25 220
Set Length Range for Industrial 25 221
Check Character Verification 222
Security Level 223
Standard 25 224
Restore Factory Defaults 224
Enable/Disable Standard 25 224
Set Length Range for Standard 25 225
Check Character Verification 226
Security Level 227
Plessey 228
Restore Factory Defaults 228
Enable/Disable Plessey 228
Set Length Range for Plessey 229
Check Character Verification 230
Security Level 231
MSI-Plessey 232
Restore Factory Defaults 232
Enable/Disable MSI-Plessey 232
Set Length Range for MSI-Plessey 233
Check Character Verification 234
Transmit Check Character 235

Security Level 236
AIM 128 237
Restore Factory Defaults 237
Enable/Disable AIM 128 237
Set Length Range for AIM 128 238
Transmit Check Character 239
FNC1 Transmit 239
Security Level 240
ISBT 128 241
Restore Factory Defaults 241
Enable/Disable ISBT 128 241
Security Level 242
Code 49 243
Restore Factory Defaults 243
Enable/Disable Code 49 243
Set Length Range for Code 49 244
Security Level 245
Code 16K 246
Restore Factory Defaults 246
Enable/Disable Code 16K 246
Set Length Range for Code 16K 247
Security Level 248
COOP 25 249
Restore Factory Defaults 249
Enable/Disable COOP 25 249
Set Length Range for COOP 25 250
Check Character Verification 251
Security Level 252
PDF417 253
Restore Factory Defaults 253
Enable/Disable PDF417 253
Set Length Range for PDF417 254
PDF417 Inverse 255
Character Encoding 255
PDF417 ECI Output 256
Micro PDF417 257
Restore Factory Defaults 257
Enable/Disable Micro PDF417 257

Set Length Range for Micro PDF417 258
QR Code 259
Restore Factory Defaults 259
Enable/Disable QR Code 259
Set Length Range for QR Code 260
QR Inverse 261
Character Encoding 261
QR ECI Output 262
URL QR 263
Micro QR Code 264
Restore Factory Defaults 264
Enable/Disable Micro QR 264
Set Length Range for Micro QR 265
Aztec 266
Restore Factory Defaults 266
Enable/Disable Aztec Code 266
Set Length Range for Aztec Code 267
Aztec Inverse 268
Character Encoding 269
Aztec ECI Output 269
Data Matrix 270
Restore Factory Defaults 270
Enable/Disable Data Matrix 270
Set Length Range for Data Matrix 271
Rectangular Barcode 272
Data Matrix Inverse 272
DotCode 273
High Density 273
Mirror Image 274
Character Encoding 275
Data Matrix ECI Output 275
Maxicode 276
Restore Factory Defaults 276
Enable/Disable Maxicode 276
Set Length Range for Maxicode 277
Chinese Sensible Code 278
Restore Factory Defaults 278
Enable/Disable Chinese Sensible Code 278

Set Length Range for Chinese Sensible Code 279
Chinese Sensible Twin Code 280
Chinese Sensible Code Inverse 281
GM Code 282
Restore Factory Defaults 282
Enable/Disable GM 282
Set Length Range for GM 283
Code One 284
Restore Factory Defaults 284
Enable/Disable Code One 284
Set Length Range for Code One 285
USPS Postnet 286
Restore Factory Defaults 286
Enable/Disable USPS Postnet 286
Transmit Check Character 286
USPS Intelligent Mail 287
Restore Factory Defaults 287
Enable/Disable USPS Intelligent Mail 287
Royal Mail 288
Restore Factory Defaults 288
Enable/Disable Royal Mail 288
USPS Planet 289
Restore Factory Defaults 289
Enable/Disable USPS Planet 289
Transmit Check Character 289
KIX Post 290
Restore Factory Defaults 290
Enable/Disable KIX Post 290
Australian Postal 291
Restore Factory Defaults 291
Enable/Disable Australian Postal 291
Japan Post 292
Restore Factory Defaults 292
Enable/Disable Japan Post 292
AI OCR 293
OCR Output 293
OCR Security Level 293
Digimarc 294

Chapter 11 Data Formatter 295

Introduction 295
Add a Data Format 295
Programming with Barcodes 295
Programming with Serial Commands 298
Enable/Disable Data Formatter 299
Non-Match Error Beep 300
Data Format Selection 301
Change Data Format for a Single Scan 302
Clear Data Format 303
Query Data Formats 303
Formatter Command Type 6 304
Send Commands 304
Move Commands 307
Search Commands 309
Miscellaneous Commands 312

Chapter 12 Prefix & Suffix 318

Introduction 318
Global Settings 319
Enable/Disable All Prefixes/Suffixes 319
Prefix Sequence 319
Custom Prefix 320
Enable/Disable Custom Prefix 320
Set Custom Prefix 320
AIM ID Prefix 321
Code ID Prefix 322
Restore All Default Code IDs 322
Modify Code ID 322
Custom Suffix 332
Enable/Disable Custom Suffix 332
Set Custom Suffix 332
Data Packing 333
Introduction 333
Data Packing Options 333
Terminating Character Suffix 335
Enable/Disable Terminating Character Suffix 335
Set Terminating Character Suffix 335

Chapter 13 Programming Command 337

Use of Programming Command 337

Command Syntax 337

Query Commands 338

Responses 338

Examples 339

Read Barcode On/Off 339

Make a Beeping Sound 339

Chapter 14 Batch Programming 340

Introduction 340

Create a Batch Command 341

Create a Batch Barcode 341

Use Batch Barcode 342

Appendix 343

Digit Barcodes 343

Save/Cancel Barcodes 346

Factory Defaults Table 347

AIM ID Table 361

Code ID Table 363

Symbology ID Number 365

ASCII Table 367

Unicode Key Maps 371

Preface

Introduction

This manual provides detailed instructions for setting up and using the NLS-EM2037 OEM scan engine (hereinafter referred to as **"the EM2037"** or **"the engine"**).

Chapter Description

- ✧ *Chapter 1, Getting Started* : Gives a general description of the EM2037.
- ✧ *Chapter 2, Installation* : Describes how to install the scanner, including installation information, connector, cable, ESD, and environmental considerations.
- ✧ *Chapter 3, Optics* : Provides parameters for optics and illumination.
- ✧ *Chapter 4, Electrical Specifications* : Includes the electrical characteristics for the scanner and timing sequences.
- ✧ *Chapter 5, External Reference Circuits* : Provides reference designs for external driver circuits.
- ✧ *Chapter 6, Auxiliary Tools* : Introduces useful tools you can use to set up the EM2037.
- ✧ *Chapter 7, Configuration* : Introduces the use of programming barcodes and product information query.
- ✧ *Chapter 8, Communication Interface* : Describes how to configure RS-232 and USB communication parameters.
- ✧ *Chapter 9, System Settings* : Introduces three configuration methods and describes how to configure general parameters of the EM2037.
- ✧ *Chapter 10, Symbologies* : Lists all compatible symbologies and describes how to configure the relevant parameters.
- ✧ *Chapter 11, Data Formatter* : Explains how to customize scanned data with the advanced data formatter.
- ✧ *Chapter 12, Prefix & Suffix* : Describes how to use prefix and suffix to customize scanned data.
- ✧ *Chapter 13, Programming* : Introduces how to configure EM2037.by serial commands sent from the host.

Commands

- ✧ *Chapter 14, Batch Programming* *:* Explains how to integrate a complex programming task into a single barcode.
- ✧ *Appendix* *:* Provides factory defaults table and a bunch of frequently used programming barcodes.

Explanation of Symbols

- This symbol indicates lists of required steps.

※ This symbol indicates notes of some parameters.

Explanation of Icons

	This icon indicates auxiliary tools that help users to refer to the manual at ease.
	This icon indicates this information requires extra attention from the reader.
	This icon indicates handy tips that can help you use or configure the engine with ease.
	This icon indicates practical examples that can help you to acquaint yourself with operations.

Chapter 1 Getting Started

Introduction

The EM2037 OEM scan engine is armed with CMOS image capturer and the Newland patented UIMG®, a computerized image recognition system-on-chip, featuring fast scanning and accurate decoding on barcodes on virtually any medium - paper, magnetic card, mobile phones and LCD displays. It delivers excellent DPM decoding performance and adds powerful OCR functionality to recognize English letters and numbers in images, such as phone numbers, card numbers, and passport numbers. It can be easily integrated into OEM equipment or systems, such as handheld, portable, or stationary barcode scanners.

Product Model	Aiming	Application	Field of View	Depth of Field
EM2037(SR)	Bar-shaped LED aimer	Commercial applications	Horizontal: 48°, Vertical: 31°	EAN-13：60mm~460mm (13mil) Code39：75mm~260mm (5mil) PDF417：60mm~215mm (6.7mil) DM：55mm~220mm (10mil) QR：25mm~300mm (15mil)
EM2037(HD)	Bar-shaped LED aimer	Commercial applications	Horizontal: 48°, Vertical: 31°	EAN13 ：55mm~180mm (13mil) Code39：40mm~130mm (5mil) PDF417：35mm~120mm (6.7mil) DM：35mm~125mm (10mil) QR：25mm~160mm (15mil)

Note: This guide provides general instructions for the installation. Fujian Newland Auto-ID Tech. Co., Ltd. recommends an opto-mechanical engineer should conduct an opto-mechanical analysis before design.

Symbologies

The EM2037-V5 can easily read printed barcodes and on-screen barcodes, including:

1D	EAN-8, EAN-13, UPC-E, UPC-A, Code128, UCC/EAN128, I2Of5, Matrix 25, ITF14, ITF6, CodaBar, Code39, Code93, ISSN, ISBN, Code 49, Code11, Standard25, Industrial25, MSI Plessey, China Post 25, GS1 Databar, UCC/EAN Composite, Plessey, Code 16K
2D	PDF417, QR Code, Micro QR, DataMatrix, Aztec, MaxiCode, GM Code, Chinese Sensible Code, MicroPDF417 Code, Code One
Postal	USPS PostNet, Royal Mail, USPS Planet, KIX Post, Australian Postal， USPS Intelligent Mail
OCR	Specifically, Passport

Features of the EM2037

- The EM2037 offers fully open image acquisition interface, raw data interface and I/O interface, which enable users to easily develop their own applications with Newland’s SDK.
- Powerful OCR functionality.
- Equipped with the latest AI-Powered Barcode Detection technology, it quickly and accurately detects, locates, and decodes small, low-contrast barcodes. Its self-learning capability enables intelligent parameter adjustment for different application scenarios.

Module

EM2037 Version

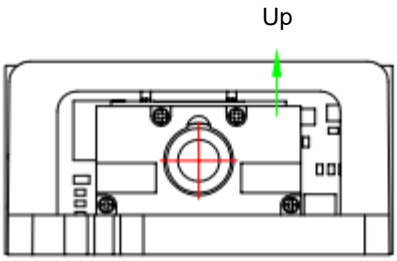

Chapter 2 Installation

Introduction

This chapter explains how to install the EM2037, including general requirements, housing design, and physical and optical information.

⚠ Caution: Do not touch the imaging lens when installing the engine. Be careful not to leave fingerprints on the lens.

⚠ Caution: Do not touch the illumination LED during handling. Improper handling may damage the LED.

Mounting

The EM2037 provides all-in-one type and split type to cater for different mounting needs.

For the all-in-one type (the decoder board and the imager already assembled on an L-shaped bracket), the user can just mount the assembled unit on the target device.

For the split type, the user can mount the decoder board and the imager separately and connect them with an FFC cable.

The illustrations below show the mechanical mounting dimensions for the EM2037. The structural design should leave some space between components and reserve sufficient room for the installation of the FFC cable.

Dimensions (unit: mm)

EM2037 version：39.5(W)×25.4(D)×20(H) (max.)

Mechanical Dimensions (Unit: mm)

EM2037 V5 Version：

Front View

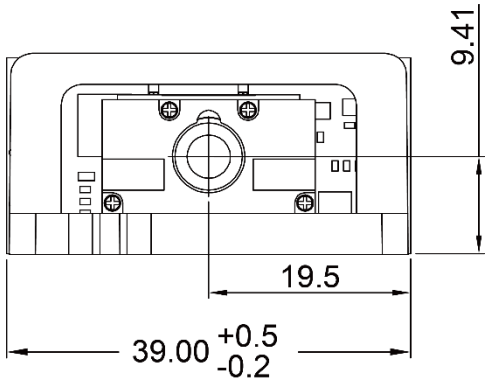

Figure 2-1

Side View

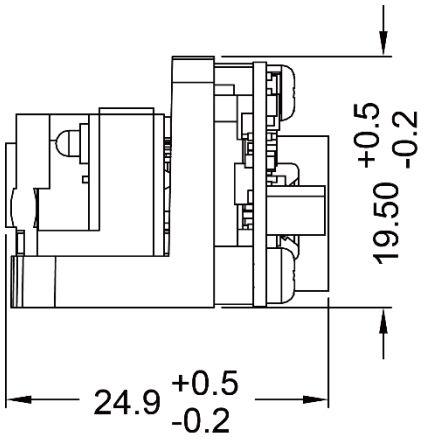

Figure 2-2

Bottom View

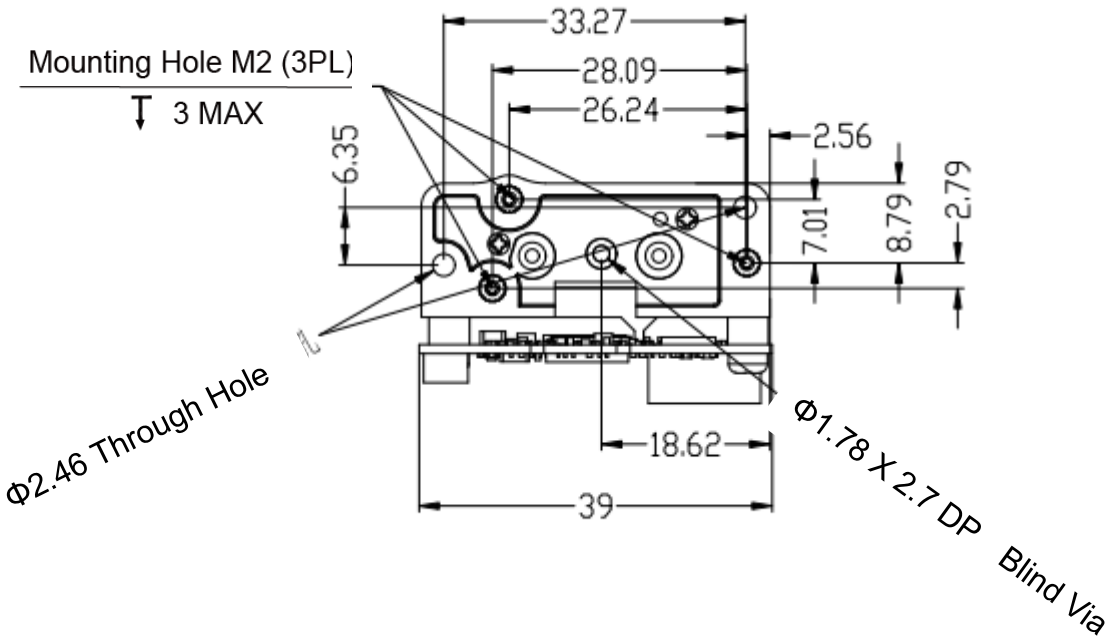
Mounting Hole M2 (3PL)
3 MAX
33.27
28.09
26.24
2.56
6.35
7.01
8.79
2.79
18.62
39
Φ2.46 Through Hole
Φ1.78 X 2.7 DP Blind Via

Figure 2-3

Mechanical Mounting Dimensions for the Imager of EM2037 V5 (Unit: mm)

Front View

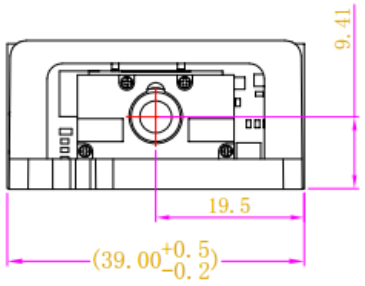

Figure 2-7

Bottom View

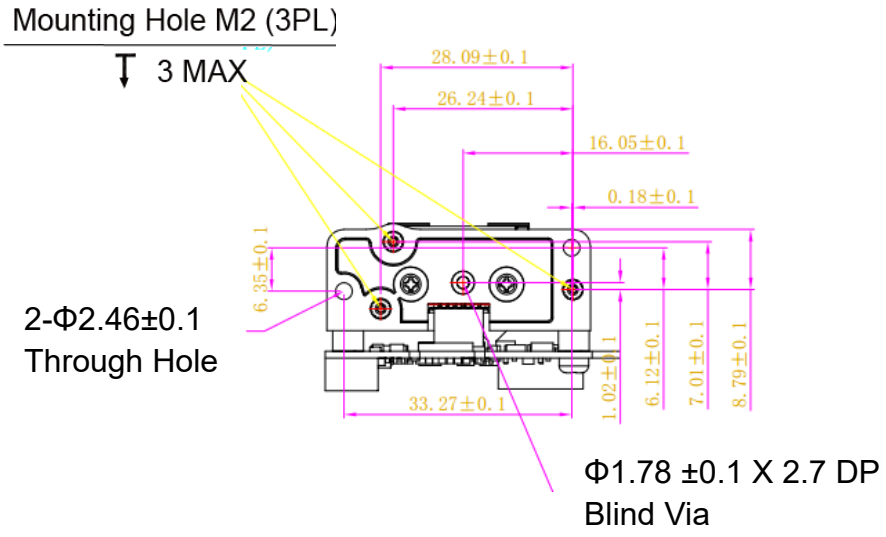

Figure 2-8

Side View

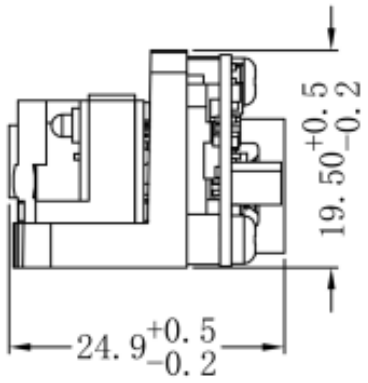

Figure 2-9

Mechanical Mounting Dimensions for the Imager of EM2037 (Unit: mm)

Front View

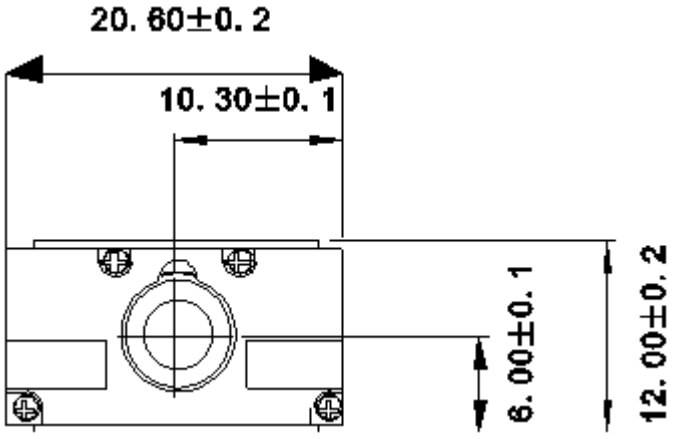

Figure 2-10

Top View

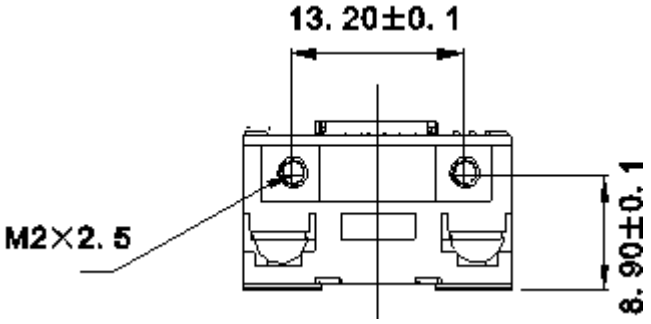

Figure 2-11

Bottom View

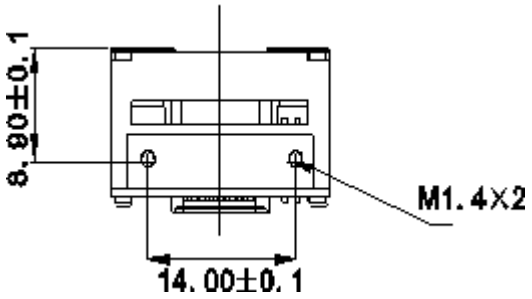

Figure 2-12

Right View

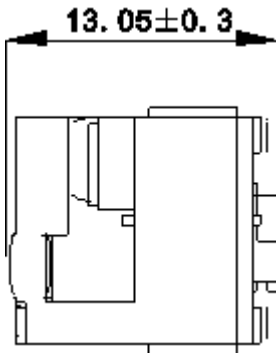

Figure 2-13

Interface Pinouts

The EM2037 can be connected to the host with 12-pin FPC connector and 8-pin Dupont connector

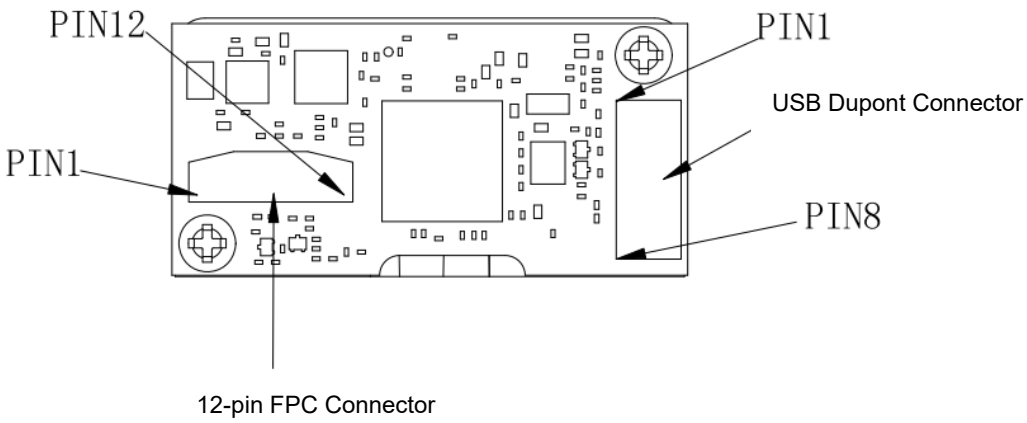

Figure 2-14

Connector Specifications

12-pin FPC Connector

The EM2037 is equipped with a 12-pin FPC connector. The connector is supplied by Hirose Electric Co.Ltd, Model No.: FH34SRJ-12S-0.5SH(50). For more information about the connector, please contact our technical support.

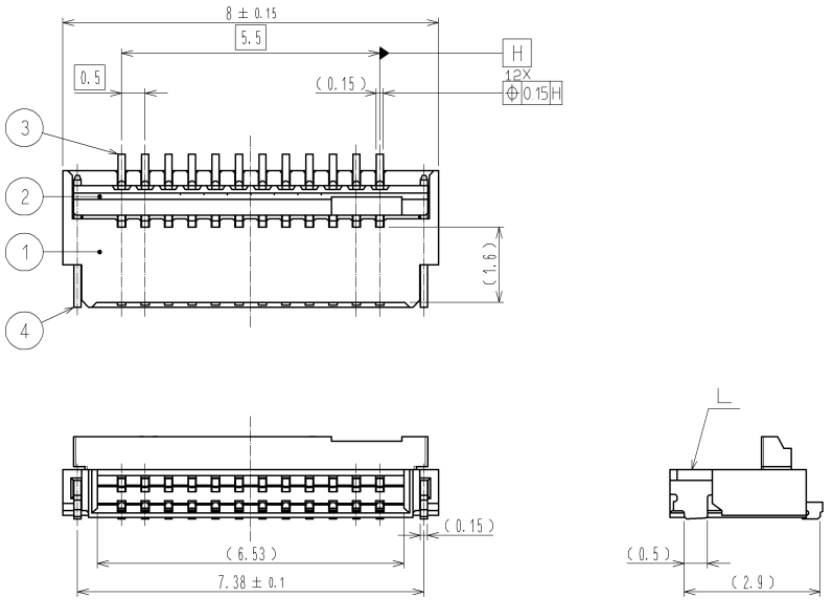

Figure 2-15

Note:

1. To ensure reliable connection, it is recommended to use the FPC with bottom-contact connections.
2. Do not close the flip cover when the FPC cable is not inserted.
3. Avoid repeated insertion and removal of the FPC cable.

12-pin FFC Cable

A 12-pin cable can be used to connect the engine’s 12-pin FPC connector to a host device.

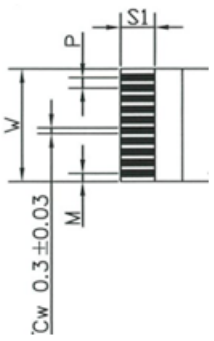

间距 (Pitch)	P	0.50±0.05
边缘宽度(Margin Width)	M	0.50±0.07
总宽度(Total Width)	W	6.50±0.07
线口长度(Strip Length)	S1	3.00±0.50

Figure 2-16

8-pin Dupont Connector

The 8-pin Dupont connector with 1.25 mm pitch is supplied by Xiamen Pintuopin Electronic Technology Co., Ltd. (Model No.: WT125A1H-083P-003).

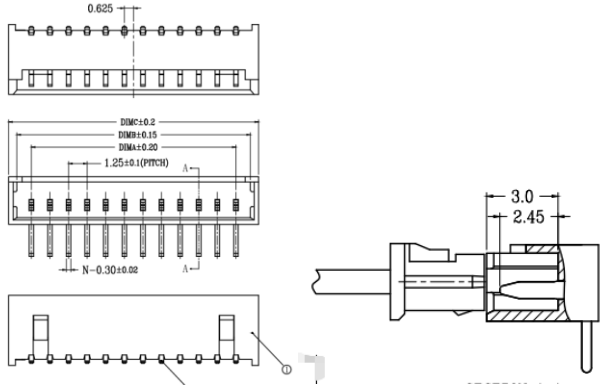

CKT	DIM A	DIM B	DIM C
2	1.25	3.20	4.30
3	2.50	4.45	5.55
4	3.75	5.70	6.80
5	5.00	6.95	8.05
6	6.25	8.20	9.30
7	7.50	9.45	10.55
8	8.75	10.70	11.80

Figure 2-17

General Requirements

ESD

ESD protection has been taken into account when designing the EM2037. However, due to limited board space, additional ESD protection, such as TVS protection, is not provided on the engine's I/O interface. It is advised to take corresponding protection measures when integrating the engine.

The engine is shipped in ESD safe packaging. Always exercise care when handling the engine outside its package. Be sure grounding wrist straps and properly grounded work areas are used.

Dust and Dirt

The EM2037 must be sufficiently enclosed to prevent dust particles from gathering on the lens and circuit board. Dust and other external contaminants will eventually degrade the engine's performance.

Ambient Environment

The following environmental requirements should be met to ensure good performance of the EM2037.

Table 2-1

Operating Temperature	-20℃ to 60℃
Storage Temperature	-40℃ to 70℃
Humidity	5% ~95% (non-condensing)

Thermal Considerations

Electronic components in the EM2037 will generate heat during the course of their operation. Operating the EM2037 in continuous mode for an extended period may cause temperatures to rise on CPU, CIS, LEDs, DC/DC, etc. Overheating can degrade image quality and affect scanning performance. Given that, the following precautions should be taken into consideration when integrating the EM2037.

- ✧ Avoid continuous use of the LED for prolonged periods.
- ✧ Reserve sufficient space for good air circulation in the design.
- ✧ Avoid wrapping the EM2037 with thermal insulation materials such as rubber.

Maintenance

- ✧ The scan window should be kept clean.
- ✧ Do not scratch the scan window.
- ✧ Use the soft cloth to clean the window, such as eyeglass cleaning cloth.
- ✧ Do not spray any liquid on the scan window.
- ✧ Do not use any detergent to clean other parts of the device except for water and alcohol.

Note: The warranty DOES NOT cover damages caused by inappropriate care and maintenance.

Chapter 3 Optics

The EM2037 uses a sophisticated optical system. An improperly designed internal housing or improper selection of window material can degrade the engine's performance.

Window Placement

The window should be positioned properly to let the illumination and aiming beams pass through as much as possible and no reflections back into the engine (reflections can degrade the reading performance of the engine).

There are two alternatives to position the window.

• Parallel - The window should be positioned properly to let the illumination beam pass through as much as possible and no reflections back into the engine.

The window should be mounted close to the front of the engine (parallel). The maximum distance is measured from the front of the engine housing to the farthest surface of the window. In order to reach better reading performance, the distance from the front of the engine housing to the furthest surface of the window should not exceed 3mm and the distance from the front of the engine housing to the nearest surface of the window should be less than 1mm.

For the window distance, please see **Figure 3-1**.

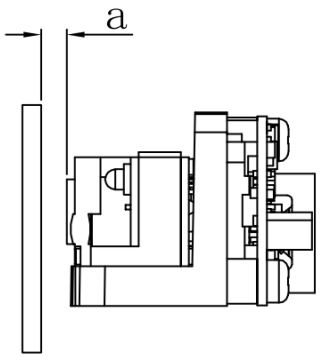

Figure 3-1

If the window is required to be in a tilted position, the distance requirements above should be met and tilt angle should ensure that no reflections back into the lens.

Window Material and Color

Wavelength of the illumination and aiming light should be taken into consideration when choosing window material and color, in order to achieve the possible highest spectral transmission, lowest haze level and homogeneous refractive index. It is suggested to use PMMA or optical glass with spectral transmittance of red light over 90% and haze less than 1%. Whether to use an anti-reflection coating or not depends on the material and application needs.

Coatings and Scratch Resistance

Scratch on the window can greatly reduce the performance of the EM2037. It is suggested to use abrasion resistant window material or coating.

Window Size

The window must not block the field of view and should be sized to accommodate the aiming and illumination envelopes shown below.

Illumination and Aiming FOV of EM2037

Vertical:

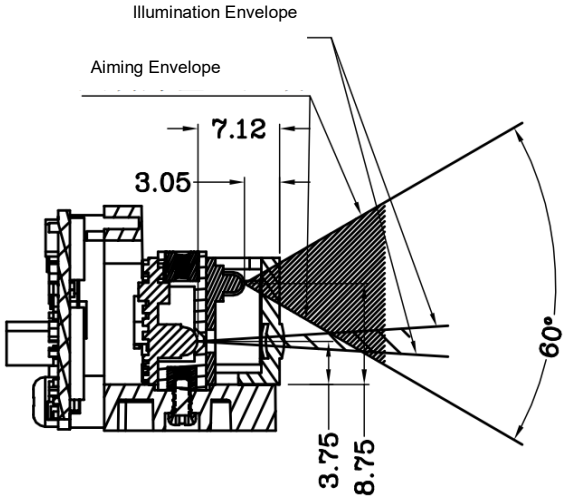

Figure 3-4

Horizontal:

Illumination Envelope

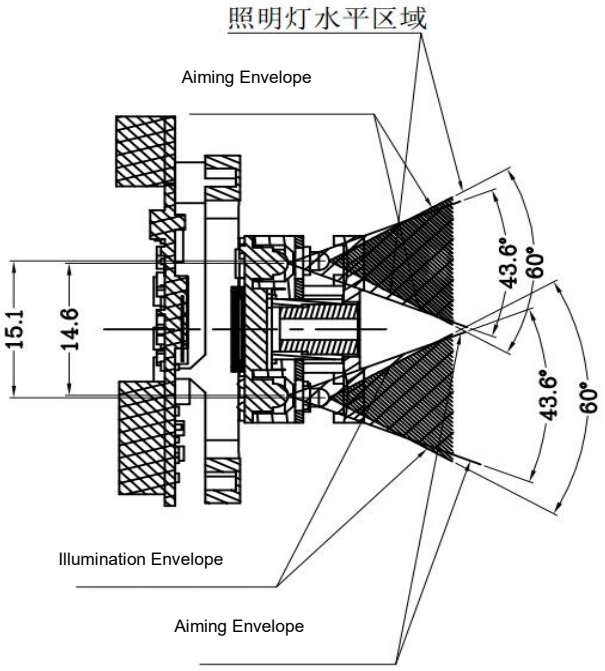

Figure 3-5

Optical FOV of EM2037

Vertical:

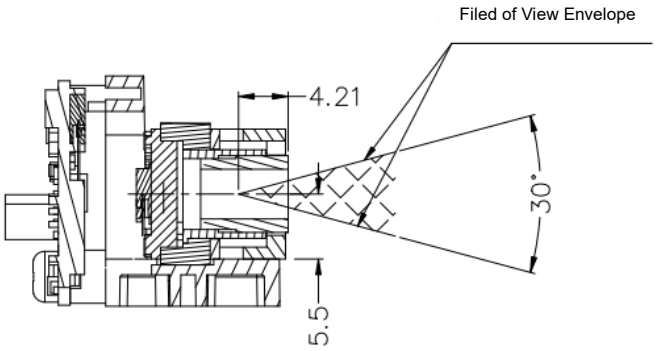

Figure 3-6

Horizontal:

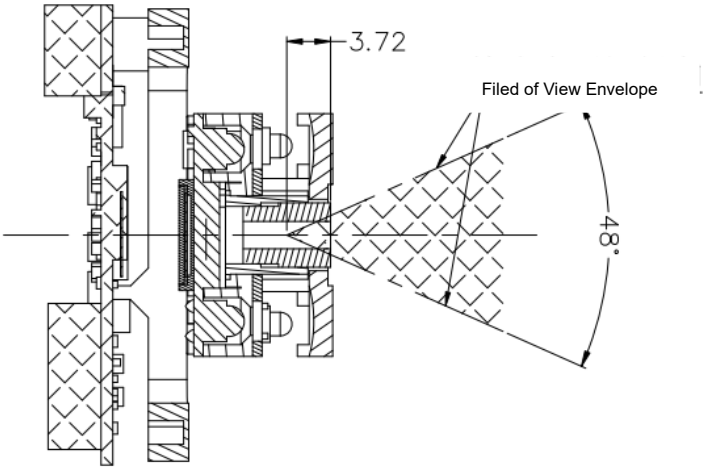

Figure 3-7

Ambient Light

The EM2037 shows better performance with ambient light. However, high-frequency pulsed light can result in performance degradation.

Eye Safety

The EM2037 uses a laser diode to form the aiming pattern and LEDs for illumination. The wavelengths of the laser and LED light sources generated under normal operating conditions are safe. The LED light intensity used by EM2037 is relatively high. Avoid looking directly into the LEDs or directing the beam into human eyes during operation.

LED Compliance Statement



The EM2037 complies with IEC 62471:2006 for LED safety.



The EM2037 complies with IEC60825-1:2014 for Laser safety.

Depth of Field

The tables below list the depth of view tested in the 0lx and 300lx natural light.

EM2037 Version

Table 3-1

Depth of Field	EM2037（SR）	EM2037（HD）
	EAN-13：60mm~460mm (13mil)	EAN13 ：55mm~180mm (13mil)
	Code39：60mm~260mm (5mil)	Code39：40mm~130mm (5mil)
	PDF417：60mm~215mm (6.7mil)	PDF417：35mm~120mm (6.7mil)
	DM：55mm~220mm (10mil)	DM：35mm~125mm (10mil)

Chapter 4 Electrical Specifications

Power Supply

Do not power up the EM2037 until it is properly connected. Be sure the power is cut off before connecting a cable to or disconnecting a cable from the host interface connector. Hot-plugging could damage the engine.

Unstable power supply or sharp voltage drops or unreasonably short interval between power-ons may lead to unstable performance of the engine. Do not resupply the power immediately after cutting it off.



1 Ensure that the input power drops below 0.5V before powering the EM2037 on again, otherwise it will lead to abnormal function.

2 Attention should be paid to the power quality and testing to ensure the best performance of the EM2037. Therefore, it is recommended that the input capacitor of the EM2037 power supply should be no less than 100μF.

Ripple Noise

To ensure the image quality, a power supply with low ripple noise is needed.

Acceptable ripple range (peak-to-peak) : ≤100mV

Interface Pinouts

The following table lists the pin functions of the 12-pin FPC connector.

Table 4-1

PIN#	Signal	I/O	Description
1	EXT_ILLUM1	I/O	External illumination control signal 1
2	VCC	P	3.3~5VDC power supply.
3	GND	P	Ground
4	TTL232_RX	I	TTL level 232 receive data
5	TTL232_TX	O	TTL level 232 transmit data
6	USB_D-	I/O	USB D- signal
7	USB_D+	I/O	USB D+ signal
8	RTS	I/O	TTL level 232 request-to-send
9	EXT_BUZ	I/O	Buzzer output (PWM)
10	EXT_DSF	I/O	Good read LED output.
11	CTS#	I/O	TTL level 232 clear-to-send
12	EXT_TRIG#	I	Trigger signal input(active low), default high, 10kΩ internal pull-up

※ I = Input; O = Output; od = Open Drain; P = Power

※ 2 This output signal can be used by an external beeper circuit to generate audible feedback to the user to indicate power-on and good read statuses.

Power On beep: The EXT_BUZ pin (PIN 9) produces a PWM output (duration: 400ms; the parameter is **NOT** user-programmable) 1s after power-on. The beep can be programmed On or Off. To learn how to program the parameter, please see the EM2037 user guide.

Good Read beep: The EXT_BUZ pin (PIN 9) produces a PWM output (default duration: 80ms; default frequency: 2730Hz, both parameters are user-programmable) when a good read occurs. The beep can be programmed On or Off. To learn how to program these parameters, please see the EM2037 user guide.

For the external beeper circuit design, please see the “Beeper Circuit” section in Chapter 5. If the EXT_BUZ pin is not used, leave it unconnected.

※ 3 This output signal can be used by an external LED to indicate good read status.

The EXT_DSF pin (PIN 10) produces a high output (default duration: 20ms, user-programmable) when a good read occurs. The Good Read LED can be programmed On or Off. To learn how to program these parameters, please see the EM2037 user guide.

For the external LED circuit design, please see the “Good Read LED Circuit” section in Chapter 5. If the EXT_DSF pin is not used, leave it unconnected.

※ 4 A trigger pull activates a decode session (pulse width ⩾20ms; 50ms recommended). The decode session continues until

a barcode is decoded or the trigger is released. The minimum interval between trigger pulls should exceed 0.5s (1s recommended).

For the external trigger circuit, please see the “Trigger Circuit” section in Chapter 5.

The following table lists the pin functions of the 8-pin DuPont Connector.

Table 4-2

PIN#	Signal	I/O	Function
1	IO1/TTL232_TX2	I/O	IO1/TTL232_TX2 transmit data
2	IO2/TTL232_RX2	I/O	IO1/TTL232_TX2 receive data
3	IO3/EXT_ILLUM2	I/O	GPIO, external illumination control signal 2
4	IO4/EXT_ILLUM3	I/O	GPIO, external illumination control signal 3
5	VCC	P	3.3~5VDC power supply.
6	D+	USB	USB D+ signal
7	D-	USB	USB D- signal
8	GND	P	Ground

DC Characteristics

Operating Voltage

Table 4-3

T=25°C

Parameter	Description	Minimum	Typical	Maximum	Unit
VCC	Input Voltage	3.14	3.3	5.5	V

Operating Current

Table 4-4

T=25°C

Mode		Typical	Maximum	Unit
Working Current	RMS [1]	270	350	mA
	PEAK [2]	696	-	mA
Idle Current	RMS	70	95	mA
Sleep Current	RMS	TBD	TBD	mA

1. RMS indicates the RMS value of the current under the stable working state.

2. PEAK indicates the peak current the device reaches.

I/O Voltage

Table 4-5

VCC=3.3-5V, GND =0 V, T=25°C

Parameter	Description	Minimum	Maximum	Unit
VIL	input low level	0	0.8	V
VIH	input high level	2.0	3.3	V
VOL	output low level	0	0.4	V
VOH	output high level	2.4	3.3	V

Timing Sequence

Power Up and Power Down Timing Sequence

1. Before powering on the engine, ensure that all the signals remain low to prevent current from flowing backwards to affect the performance of the engine. Initialization will be completed within 1s if the EXT_TRIG# and EXT_RST# are not pulled down after power-on.
2. The EXT_BUZ pin produces a PWM output (duration: 400ms) after initialization.
3. Before powering off the engine, all the signals should drive low within 2ms. To ensure that the engine works at a stable level, the minimum interval between removing and resupplying the power must exceed 2s.

Chapter 5 External Reference Circuit

External Circuit Design

Good Read LED Circuit

The circuit below is used to drive an external LED for indicating good read. The EXT_DSF signal is from PIN 10 of the 12-pin FPC connector.

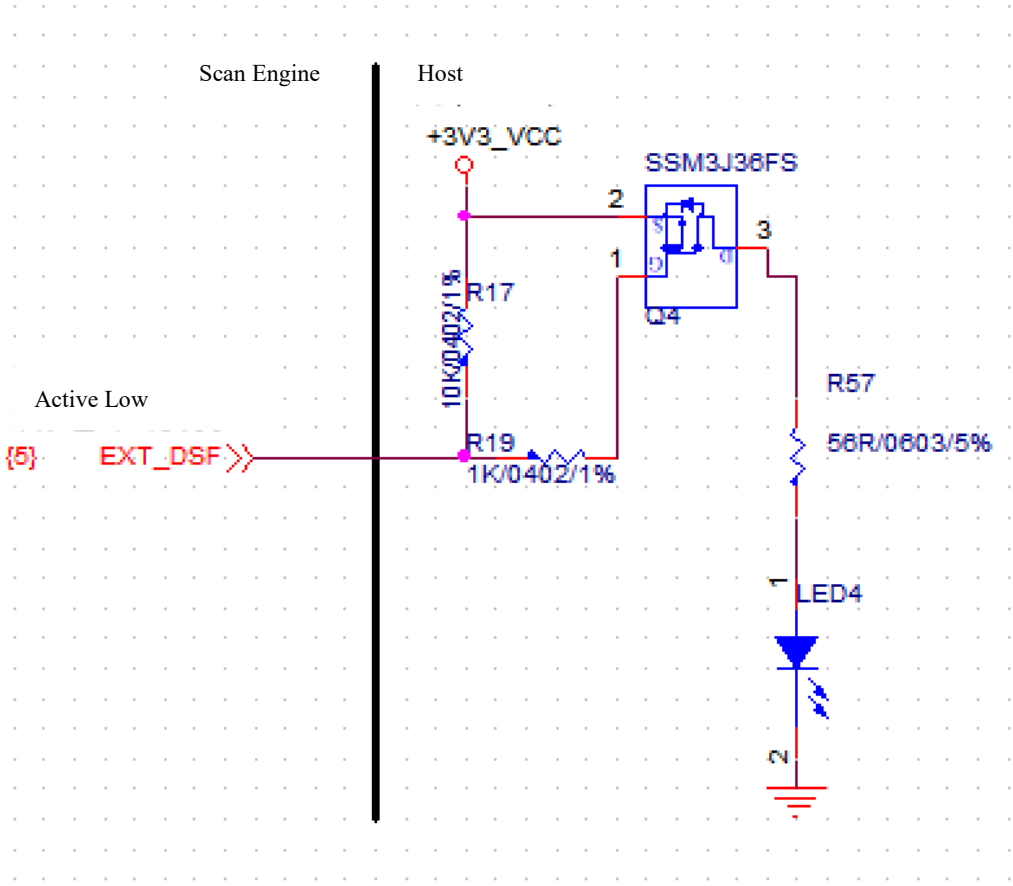

Figure 5-1

Beeper Circuit

The circuit below is used to drive an external beeper. The EXT_BUZ signal is from PIN 9 of the 12-pin FPC connector.

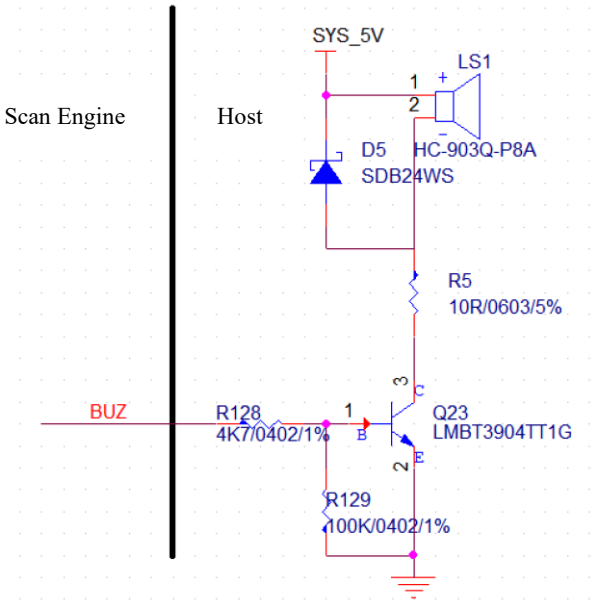

Figure 5-2

Trigger Circuit

The circuit below is used to provide the engine with a signal to trigger a scan and decode session. The EXT_TRIG# signal is from PIN 12 of the 12-pin FPC connector.

Users can adjust the external circuit and its function as per actual needs, on condition that the external circuit matches the internal circuit.

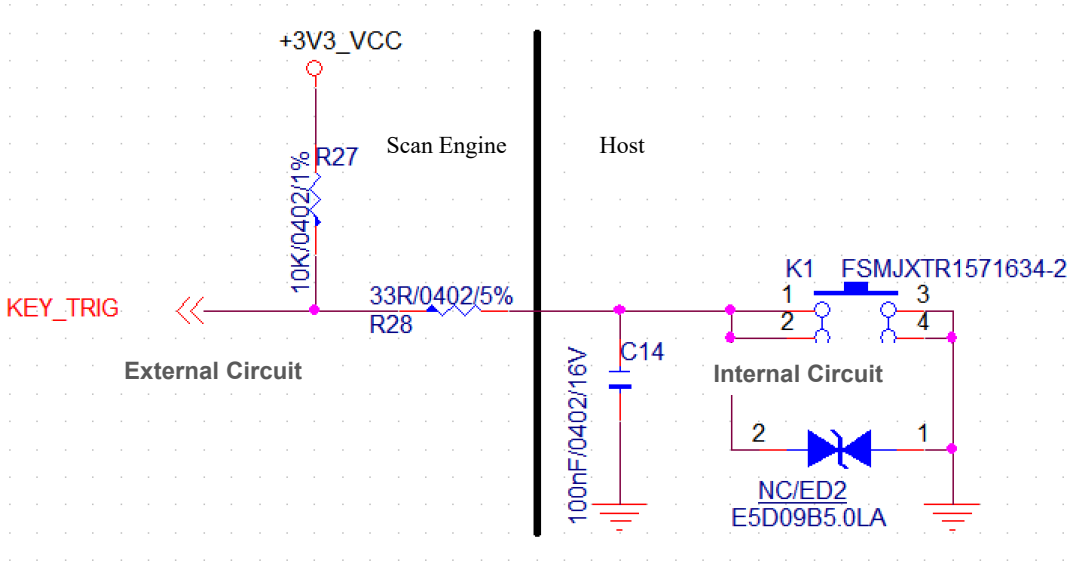

Figure 5-3

External Lgiht Control Circuit

The circuit below is used to drive an external illumination control signal. The EXT_ILLUM1 signal is from PIN 1 of the 12-pin FPC connector.

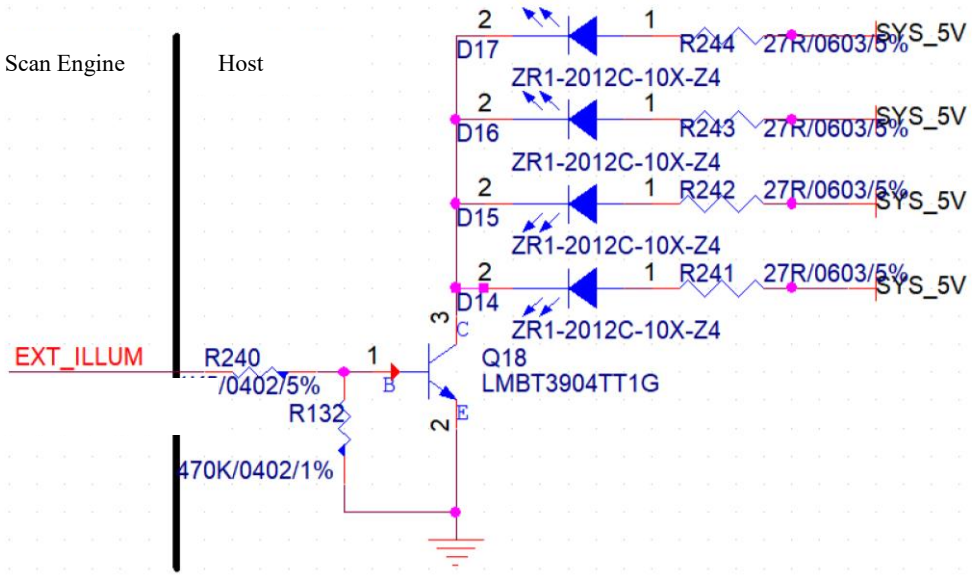

Figure 5-4

A reference circuit for driving two LEDs connected in series is shown below.

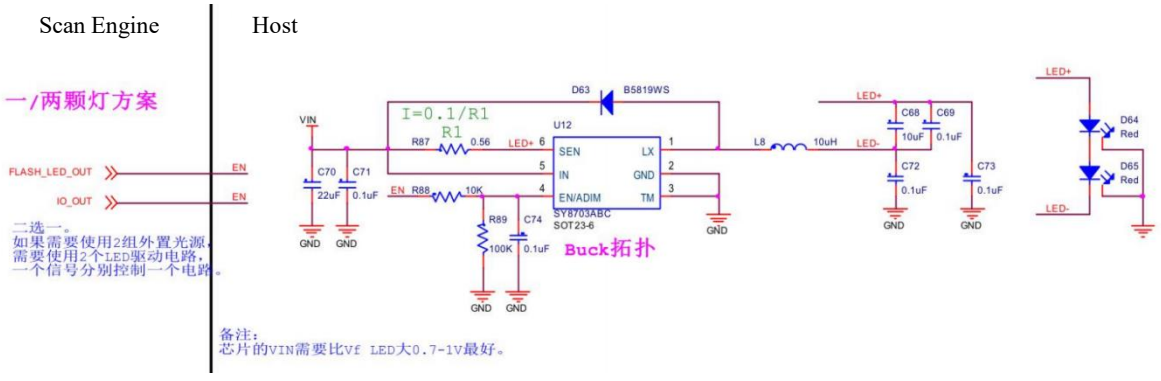

Figure 5-5

Chapter 6 Auxiliary Tools

The EM2037 provides the following tools to assist users in engine performance evaluation, application development and engine configuration.

EVK

The EVK is provided to help users to test and evaluate the EM2037, which contains beeper & beeper driver circuit, LED & LED driver circuit, and trigger & reset buttons, TTL-232 to RS-232 converter & TTL-232 to USB converter, RS-232 & USB interfaces, etc. The EM2037 can be connected to the EVK via a 12-pin FFC cable type 1 (contacts on the same side). Either USB connection or RS-232 connection can be used when connecting the EVK to a host device.

EasySet

EasySet, developed by Fujian Newland Auto-ID Tech. Co., Ltd., is a configuration tool for Newland's 1D/2D handheld barcode scanner, fixed mount barcode scanners and OEM scan engines. Its main features include:

- ✧ View device & configuration information of online device
- ✧ Configure device
- ✧ Update firmware of online device
- ✧ Load/modify existing XML configuration file; save current settings to an XML file
- ✧ Create/print/save programming barcodes to a PDF or Word file
- ✧ View/edit/save image stored on online device in the original image/BMP/JPG/TIFF format
- ✧ Send serial commands to online device and receive device response
- ✧ Supported languages: Chinese and English

EasySet supports 32-bit/64-bit Microsoft WinXP/Win7/Win 8/Win 8.1/Win 10 operating systems.

EasySet can communicate with device via one of the following interface: TTL-232, USB COM Port Emulation (UFCOM driver required), USB CDC (UFCOM driver required), USB DataPipe (UFCOM driver required), USB HID-POS.

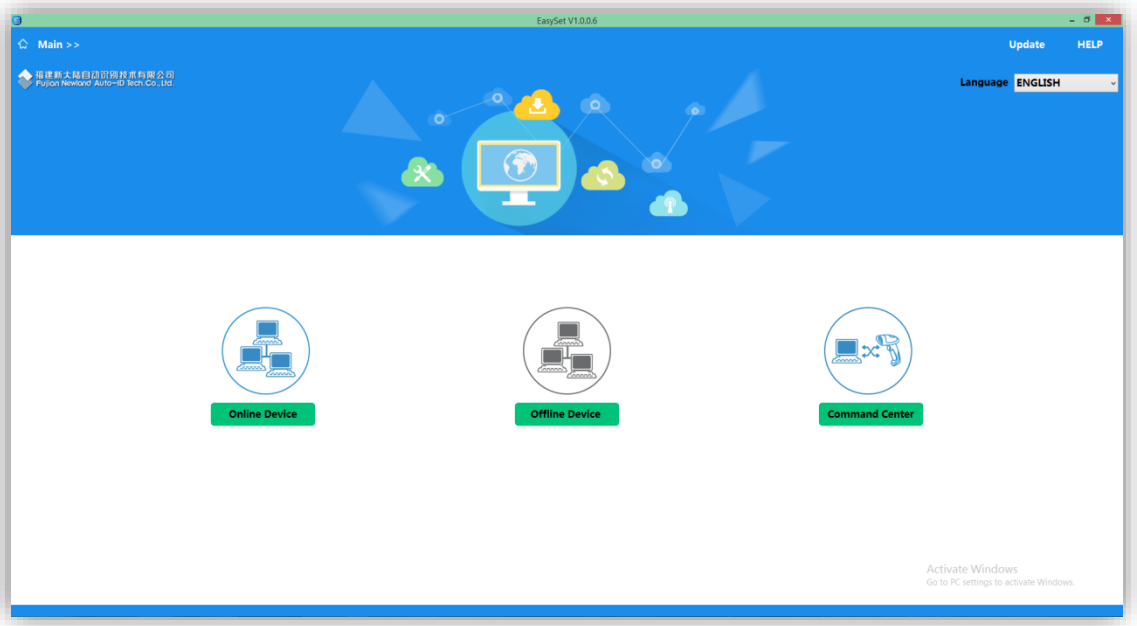

UFCOM

UFCOM, developed by Fujian Newland Auto-ID Tech. Co., Ltd., is a virtual serial driver. It is used in conjunction with a USB engine or a scan engine configured as virtual serial port to provide two-way communication between the device and the host. UFCOM can run on all versions of Windows XP ~ Windows 10 x86 & x64, including the contemporary versions of Windows Server. Users can download the driver from the website at: http://down.nlscan.com:82/Release/UFCOM/.

Chapter 7 Configuration

Introduction

There are three ways to configure the EM2037: Barcode programming, command programming and Easyset programming.

Barcode Programming

The EM2037 can be configured by scanning programming barcodes. All user programmable features/options are described along with their programming barcodes/commands in the following sections.

This programming method is most straightforward. However, it requires manually scanning barcodes. As a result, errors are more likely to occur.

Command Programming

The EM2037 can also be configured by serial commands sent from the host device.

Users can design an application program to send those command strings to the engines to perform device configuration.

EasySet Programming

Besides the two methods mentioned above, you can conveniently perform engine configuration through EasySet too. EasySet is a Windows-based configuration tool particularly designed for Newland products, enabling users to gain access to decoded data and captured images and to configure engines. For more information about this tool, refer to the *EasySet User Guide*.

Programming Barcode/ Programming Command/Function



The figure above is an example that shows you the programming barcode and command for the Enter Setup function:

1. The **No Case Conversion** barcode.
2. The **No Case Conversion** command.
3. The description of feature/option.
4. ** indicates factory default settings.

Note: “@” included in the programming command indicates permanent setting which means the setting will not be lost by removing power from the engine or turning off or rebooting it; whereas “#” included in the programming command indicates temporary setting which means the setting will be lost by removing power from the engine or turning off or rebooting it.

Use of Programming Barcodes

Scanning the **Enter Setup** barcode can enable the engine to enter the setup mode. Then you can scan a number of programming barcodes to configure your engine. To exit the setup mode, scan the **Exit Setup** barcode or a non-programing barcode, or reboot the engine.



Exit Setup



Enter Setup

Programming barcode data (i.e. the characters under programming barcode) can be transmitted to the host device. Scan the appropriate barcode below to enable or disable the transmission of programming barcode data to the host device.



Do Not Transmit Programming Barcode Data



Transmit Programming Barcode Data

Default Settings

Factory Defaults

Scanning the following barcode can restore the engine to the factory defaults.

You may need to reset all parameters to the factory defaults when:

- ✧ engine is not properly configured so that it fails to decode barcodes.
- ✧ you forget previous configuration and want to avoid its impact.



Restore All Factory Defaults

Custom Defaults

Scanning the **Restore All Custom Defaults** barcode can reset all parameters to the custom defaults. Scanning the **Save as Custom Defaults** barcode can set the current settings as custom defaults.

Custom defaults are stored in the non-volatile memory.



Save as Custom Defaults



Restore All Custom Defaults

Restoring the engine to the factory defaults will not remove the custom defaults from the engine.

Query Product Information

After scanning the barcode below, the product information (including product name, firmware version, decoder version, hardware version, serial number, OEM serial number and manufacturing date) will be sent to the host device.



Query Product Information

Query Product Name



Query Product Name

Query Firmware Version



Query Firmware Version

Query Decoder Version



Query Decoder Version

Query Hardware Version



Query Hardware Version

Query Product Serial Number



Query Product Serial Number

Query Manufacturing Date



Query Manufacturing Date

Query OEM Serial Number



Query OEM Serial Number

Query Data Formatter Version



Query Data Formatter Version

Chapter 8 Communication Interface

Introduction

- ✧ Serial communication interface is usually used when connecting the engine to a host device (like PC, POS). You need to set communication parameters to match the host device.
- ✧ USB HID Keyboard: The engine's transmission is simulated as USB keyboard input with no need for command configuration or a driver. Barcode data could be entered by the virtual keyboard directly and it is also convenient for the host device to receive data.
- ✧ USB CDC: It is compliant with the standard USB CDC class specifications defined by the USB-IF and allows the host device to receive data in the way as a serial port does. A driver is needed when using this feature.
- ✧ HID POS (POS HID Barcode Scanner): It is based on the HID interface, with no need for a custom driver. It excels virtual keyboard and traditional TTL-232 interface in transmission speed.
- ✧ IBM SurePOS: It conforms to IBM (now Toshiba Global Commerce Solutions) 4698 USB engine interface specifications.
- ✧ Datalogic Magellan Aux-RS232: Scanning the following barcode programs the scanner for connection to the Datalogic Magellan Aux-RS232 port.

When the engine is connected to both USB and RS-232 ports on a host device, it will select the USB connection by default.

Adaptive Wired Communication

When this feature is on, the engine can automatically adapt its communication configuration to the way it is connected to the host device: Automatically enable USB/serial communication when connected to the host device via USB/serial port, respectively.

Note: You must restart the engine before this setting will take effect.



Off



On

RS-232 Interface

Serial communication interface is usually used when connecting the engine to a host device (like PC, POS). However, to ensure smooth communication and accuracy of data, you need to set communication parameters (including baud rate, parity check, data bit and stop bit) to match the host device.



RS-232

Baud Rate

Baud rate is the number of bits of data transmitted per second. Set the baud rate to match the host requirements.



115200



57600



38400



19200



14400



9600



4800



2400



1200

Parity Check

Set the parity type to match the host requirements.

Odd Parity: If the data contains an odd number of 1 bits, the parity bit value is set to 0.

Even Parity: If the data contains an even number of 1 bits, the parity bit value is set to 0.

None: Select this option when no parity bit is required.



None



Even Parity



Odd Parity

Data Bit

Set the number of data bits to match the host requirements.



7 Data Bits



8 Data Bits

Stop Bit

The stop bit(s) at the end of each transmitted character marks the end of transmission of one character and prepares the receiving device for the next character in the serial data stream. Set the number of stop bits to match the host requirements.



1 Stop Bit



2 Stop Bits

Hardware Auto Flow Control

If this feature is enabled, the engine determines whether to transmit data based on CTS signal level. When CTS signal is at a low level which means the serial port's cache memory of receiving device (such as PC) is full, the engine sends data through RS-232 port until CTS signal is set to high level by receiving device. When the engine is not ready for receiving, it will set RTS signal to low level. When sending device (such as PC) detects it, it will not send data to the engine any more to prevent data loss.

If this feature is disabled, reception/transmission of serial data will not be influenced by RTS/CTS signal.



** **Disable Hardware Auto Flow Control**



Enable Hardware Auto Flow Control

Before enabling this feature, make sure that RTS/CTS signal lines are contained in serial cable. Without the signal lines, serial communication errors will occur.

USB HID Keyboard

When the engine is connected to the USB port on a host device, you can enable the USB HID Keyboard feature by scanning the barcode below. Then engine’s transmission will be simulated as USB keyboard input. The Host receives keystrokes onthe virtual keyboard. It works on a Plug and Play basis and no driver is required.

@INTERF3

USB HID Keyboard

If the host device allows keyboard input, then no extra software is needed for HID Keyboard input.

USB Country Keyboard Types

Keyboard layouts vary from country to country. The default setting is U.S. keyboard.



U.S. (English)

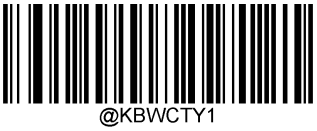

Belgium



Brazil



Canada (French)



Czechoslovakia



Denmark



Finland (Swedish)



France



Germany/ Austria

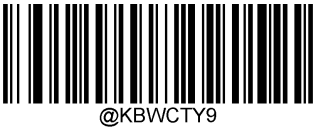

Greece

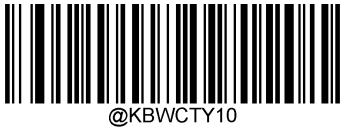

Hungary

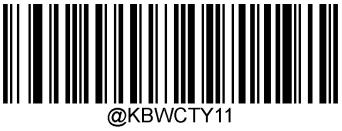

Israel (Hebrew)



Italy



Latin America/ South America

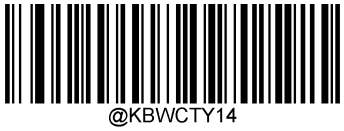

Netherlands (Dutch)



Norway



Poland



Portugal



Romania



Russia

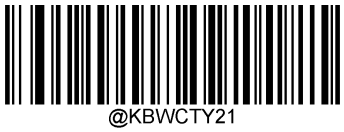

Slovakia



Spain

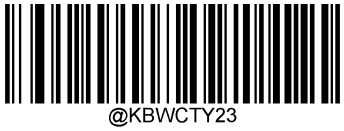

Sweden



Switzerland (German)



Turkey_F

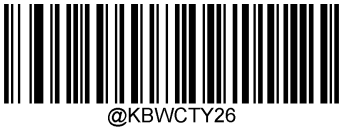

Turkey_Q

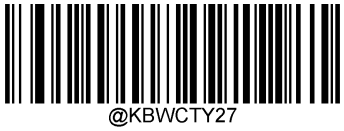

UK



Japan



Vietnam

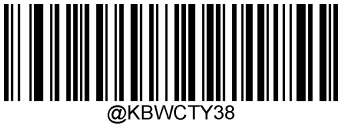

Vietnam (Telegraph)

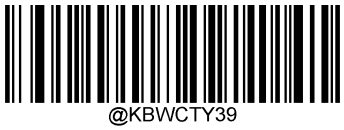

Vietnam (Numeric Keypad)

Beep on Unknown Character

Due to the differences in keyboard layouts, some characters contained in barcode data may be unavailable on the selected keyboard. As a result, the engine fails to transmit the unknown characters.

Scan the appropriate barcode below to enable or disable the emission of beep when an unknown character is detected.

@KBWBUC0

Do Not Beep on Unknown Character

@KBWBUC1

Beep on Unknown Character

Supposing French keyboard (Country Code: 7) is selected and barcode data ”AĐF” is being dealted with, the keyboard will fail to locate the “Đ” (0xD0) character and the engine will ignore the character and continue to process the next one.

Do Not Beep on Unknown Character: The engine does not beep and the Host receives “AF”.

Beep on Unknown Character: The engine beeps and the Host still receives “AF”.

If **Emulate ALT+Keypad ON** is selected, **Beep on Unknown Character** does not function.

Emulate ALT+Keypad

When **Emulate ALT+Keypad** is turned on, ASCII characters (0x20 - 0xFF) are sent over the numeric keypad no matter which keyboard type is selected.

1. ALT Make
2. Enter the number corresponding to a desired character on the keypad.
3. ALT Break

After **Emulate ALT+Keypad ON** is selected, you need to choose the code page with which the barcodes were created and to turn **Unicode Encoding** On or Off depending on the encoding used by the application software.



Emulate ALT+Keypad OFF



Emulate ALT+Keypad ON

Since sending a character involves multiple keystroke emulations, this method appears less efficient.

Supposing **Emulate ALT+Keypad** is ON, **Unicode Encoding** is Off, **Code Page 1252 (West European Latin)** is selected, and **Emulate Keypad with Leading Zero** is Off, barcode data ”AÐF” (65/208/70) is sent as below:

“A” – “ALT Make” + “065” + “ALT Break”

“Ð” -- “ALT Make” + “208” + “ALT Break”

“F” -- “ALT Make” + “070” + “ALT Break”

Code Page

Code pages define the mapping of character codes to characters. If the data received does not display with the proper characters, it may be because the barcode being scanned was created using a code page that is different from the one the host program is expecting. If this is the case, select the code page with which the barcodes were created by scanning the appropriate barcode below. For PDF417, QR Code and Data Matrix, besides setting the code page, you also need to set the character encoding in the “Character Encoding” section in Chapter 6. This feature is only effective when **Emulate ALT+Keypad** is turned on.

Note: Code Page 932, Code Page 936 and Code Page 950 are selectable and respectively supported by different software versions.



Code Page 1252 (West European Latin)



Code Page 1251 (Cyrillic)



Code Page 1250 (Central and East European Latin)



Code Page 1253 (Greek)



Code Page 1254 (Turkish)



Code Page 1255 (Hebrew)



Code Page 1256 (Arabic)



Code Page 1257 (Baltic)



Code Page 1258 (Vietnamese)



Code Page 936 (Simplified Chinese, GB2312,GBK）



Code Page 950 (Traditional Chinese, Big5)



Code Page 874 (Thai)



Code Page 932 (Japanese, Shift-JIS)

Unicode Encoding

Different host program may use different character encodings for handling incoming barcode data. For instance, Microsoft Office Word uses Unicode encoding and therefore you should turn **Unicode Encoding** on, whereas Microsoft Office Excel or Notepad uses Code Page encoding and therefore you should turn **Unicode Encoding** off. This feature is only effective when **Emulate ALT+Keypad** is turned on.



Off

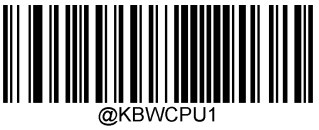

On

Emulate Keypad with Leading Zero

You may turn this feature on to send character sequences sent over the numeric keypad as ISO characters which have a leading zero. For example, ASCII A transmits as “ALT MAKE” 0065 “ALT BREAK”. This feature is only effective when **Emulate ALT+Keypad** is enabled.



On



Off

Function Key Mapping

When **Ctrl+ASCII Mode** is selected, function characters (0x00 - 0x1F) are sent as ASCII sequences.



Disable

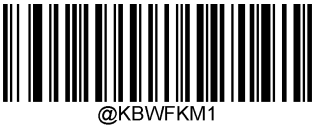

Ctrl+ASCII Mode



Alt+Keypad Mode

If **Ctrl+ASCII Mode** is selected and other parameters of USB HID Keyboard adopt factory defaults, barcode data “A<HT>(i.e. Horizontal Tab)F” (0x41/0x09/0x46) is sent as below:

“A” - Keystroke “A”.

<HT> - “Ctrl Make” + Keystroke “I” + “Ctrl Break”

“F” - Keystroke “F”

For some text editors, “Ctrl I” means italic convert. So the output may be “A*F*”.

If **Alt+Keypad Mode** is selected and other parameters of USB HID Keyboard adopt factory defaults, the data above is sent as below:

“A” - Keystroke “A”.

<HT> - “Alt Make” + Keystrokes “009” + “Alt Break”

“F” - Keystroke “F”

ASCII Function Key Mapping Table

ASCII Function	ASCII Value (HEX)	Function Key Mapping Disabled	Ctrl+ASCII
NUL	00	Null	Ctrl+@
SOH	01	Keypad Enter	Ctrl+A
STX	02	Caps Lock	Ctrl+B
ETX	03	ALT	Ctrl+C
EOT	04	Null	Ctrl+D
ENQ	05	CTRL	Ctrl+E
ACK	06	Null	Ctrl+F
BEL	07	Enter	Ctrl+G
BS	08	Left Arrow	Ctrl+H
HT	09	Horizontal Tab	Ctrl+I
LF	0A	Down Arrow	Ctrl+J
VT	0B	Vertical Tab	Ctrl+K
FF	0C	Delete	Ctrl+L
CR	0D	Enter	Ctrl+M
SO	0E	Insert	Ctrl+N
SI	0F	Esc	Ctrl+O
DLE	10	F11	Ctrl+P
DC1	11	Home	Ctrl+Q
DC2	12	Print Screen	Ctrl+R
DC3	13	Backspace	Ctrl+S
DC4	14	tab+shift	Ctrl+T
NAK	15	F12	Ctrl+U
SYN	16	F1	Ctrl+V
ETB	17	F2	Ctrl+W
CAN	18	F3	Ctrl+X
EM	19	F4	Ctrl+Y
SUB	1A	F5	Ctrl+Z
ESC	1B	F6	Ctrl+[
FS	1C	F7	Ctrl+\
GS	1D	F8	Ctrl+]
RS	1E	F9	Ctrl+6
US	1F	F10	Ctrl+-

ASCII Function Key Mapping Table (Continued)

The last five characters (0x1B~0x1F) in the table above apply to US keyboard layout only. The following chart provides the equivalents of these five characters for other countries.

Country	Ctrl+ASCII					
United States	Ctrl+[	Ctrl+\	Ctrl+]	Ctrl+6	Ctrl+-	
Belgium	Ctrl+[	Ctrl+<	Ctrl+]	Ctrl+6	Ctrl+-	
Scandinavia	Ctrl+8	Ctrl+<	Ctrl+9	Ctrl+6	Ctrl+-	
France	Ctrl+^	Ctrl+8	Ctrl+$	Ctrl+6	Ctrl+=	
Germany		Ctrl+Ã	Ctrl++	Ctrl+6	Ctrl+-	
Italy		Ctrl+\	Ctrl++	Ctrl+6	Ctrl+-	
Switzerland		Ctrl+<	Ctrl+..	Ctrl+6	Ctrl+-	
United Kingdom	Ctrl+[	Ctrl+¢	Ctrl+]	Ctrl+6	Ctrl+-	
Denmark	Ctrl+8	Ctrl+\	Ctrl+9	Ctrl+6	Ctrl+-	
Norway	Ctrl+8	Ctrl+\	Ctrl+9	Ctrl+6	Ctrl+-	
Spain	Ctrl+[	Ctrl+\	Ctrl+]	Ctrl+6	Ctrl+-	

Inter-Keystroke Delay

This parameter specifies the delay between emulated keystrokes.



No Delay



Long Delay (40ms)



Short Delay (20ms)

Caps Lock

The **Caps Lock On** options can invert upper and lower case characters contained in barcode data. This inversion occurs regardless of the state of Caps Lock key on the host device's keyboard. To disable this feature, scan the appropriate **Caps Lock OFF** barcode below based on your keyboard.



Caps Lock OFF, Non-Japanese Keyboard



Caps Lock ON, Non-Japanese Keyboard



Caps Lock OFF, Japanese Keyboard



Caps Lock ON, Japanese Keyboard

Emulate ALT+Keypad ON/ Convert All to Upper Case/ Convert All to Lower Case prevails over **Caps Lock ON**.

When the **Caps Lock ON** feature is selected, barcode data "AbC" is transmitted as "aBc".

Convert Case

Scan the appropriate barcode below to convert all bar code data to your desired case.



No Case Conversion



Convert All to Upper Case



Convert All to Lower Case

When the **Convert All to Lower Case** feature is enabled, barcode data “AbC” is transmitted as “abc”.

If **Emulate ALT+Keypad ON** is selected, **Convert All to Lower Case** and **Convert All to Upper Case** do not function.

Emulate Numeric Keypad



Do Not Emulate Numeric Keypad 1: Sending a number (0-9) is emulated as keystroke(s) on main keyboard.

Emulate Numeric Keypad 1: Sending a number (0-9) is emulated as keystroke(s) on numeric keypad. The state of Num Lock on the simulated numeric keypad is determined by its equivalent on the host device. If Num Lock on the host device is turned off, the output of simulated numeric keypad is function key instead of number.

Do Not Emulate Numeric Keypad 2: Sending “+”, “-”, “*” and “/” is emulated as keystroke(s) on main keyboard.

Emulate Numeric Keypad 2: Sending “+”, “-”, “*” and “/” is emulated as keystroke(s) on numeric keypad.

@KBWNUM0

Do Not Emulate Numeric Keypad 1

@KBWNUM1

Emulate Numeric Keypad 1



Do Not Emulate Numeric Keypad 2



Emulate Numeric Keypad 2

Emulate ALT+Keypad ON prevails over **Emulate Numeric Keypad**.

Supposing the **Emulate Numeric Keypad 1** feature is enabled:

if Num Lock on the host device is ON, “A4.5” is transmitted as “A4.5”;

if Num Lock on the host device is OFF, “A4.5” is transmitted as “.A”:

1. “A” is sent on main keyboard;
2. “4” is sent as the function key “Cursor Move to Left”;
3. “.” is sent on main keyboard;
4. “5” is not sent as it does not correspond to any function key.

Fast Mode

When **Fast Mode On** is selected, the engine sends characters to the Host faster. If the Host drops characters, turn the Fast Mode off or change the polling rate to a bigger value.



Fast Mode Off



Fast Mode On

Polling Rate

This parameter specifies the polling rate for a USB keyboard. If the Host drops characters, change the polling rate to a bigger value.



1ms



2ms



3ms



4ms



5ms



6ms



7ms


@KBWPOR7

8ms


@KBWPOR8

9ms


@KBWPOR9

10ms

Remove UTF-8 Byte Order Mark (BOM)



@KBWBOM0

Off



@KBWBOM1

On

USB CDC

If your engine is connected to the USB port on a host device, the USB CDC feature allows the host device to receive data in the way as a serial port does. A driver is needed when using this feature. You may download it from our website at www.newlandaidc.com.



@INTERF8

USB CDC

HID POS (POS HID Barcode Scanner)

Introduction

The HID-POS interface is recommended for new application programs. It can send up to 56 characters in a single USB report and appears more efficient than keyboard emulation.

Features:

- ✧ HID based, no custom driver required.
- ✧ Way more efficient in communication than keyboard emulation and traditional TTL-232 interface.



USB HID-POS

Access the Engine with Your Program

Use CreateFile to access the engine as a HID device and then use ReadFile to deliver the scanned data to the application program. Use WriteFile to send data to the engine.

For detailed information about USB and HID interfaces, go to www.USB.org.

Acquire Scanned Data

After a barcode is decoded, the engine sends an input report as below:

	Bit							
Byte	7	6	5	4	3	2	1	0
0	Report ID = 0x02							
1	Barcode Length							
2-57	Decoded Data (1-56)							
58-61	Reserved							
62	Newland Symbology Identifier or N/C: 0x00							
63	-	-	-	-	-	-	-	Decoded data continued

Send Command to the Engine

This output report is used to send commands to the engine. All programming commands can be used.

	Bit							
Byte	7	6	5	4	3	2	1	0
0	Report ID = 0x04							
1	Length of command							
2-63	Command (1-62)							

IBM SurePOS (Tabletop)



IBM SurePOS (Tabletop)

IBM SurePOS (Handheld)



IBM SurePOS (Handheld)

VID/PID

USB uses VID (Vendor ID) and PID (Product ID) to identify and locate a device. The VID is assigned by USB Implementers Forum. Newland's vendor ID is 1EAB (Hex). A range of PIDs are used for each Newland product family. Every PID contains a base number and interface type (keyboard, COM port, etc.).

Product	Interface	PID (Hex)
FM80	USB HID Keyboard	0x2022
	USB CDC	0x2006
	HID POS	0x2010
	IBM SurePOS (Tabletop)	0x2020
	IBM SurePOS(Handheld)	0x2021

Datalogic Magellan Aux-RS232

Scan the following barcode when connecting to the Datalogic Magellan device, and the configuration of the scanner will be automatically changed accordingly as below.



Datalogic Magellan Aux-RS232

Parameters		Default Settings
RS-232 Interface	Baud Rate	9600
	Parity Check	None
	Data Bits	8
	Stop Bits	1
	Hardware Auto Flow Control	Enabled
Code 128	Code ID	#
	Enable/Disable Code 128	Enabled
EAN-8	Code ID	FF
	Enable/Disable EAN-8	Enabled
	Check Character	Transmit
	2-Digit Add-On Code	Enabled
	5-Digit Add-On Code	Enabled
EAN-13	Code ID	F
	Enable/Disable EAN-13	Enabled
	Check Character	Transmit
	2-Digit Add-On Code	Enabled
	5-Digit Add-On Code	Enabled
UPC-E	Code ID	E
	Enable/Disable UPC-E	Enabled
	Check Character	Transmit
	2-Digit Add-On Code	Enabled
	5-Digit Add-On Code	Enabled
	Transmit Preamble Character	System Character

UPC-A	Code ID	A
	Enable/Disable UPC-A	Enabled
	Check Character	Transmit
	2-Digit Add-On Code	Enabled
	5-Digit Add-On Code	Enabled
	Transmit Preamble Character	System Character
Interleaved 2 of 5	Code ID	i
	Enable/Disable Interleaved 2 of 5	Enabled
	Check Character Verification	Transmit Check Character After Verification
Code 39	Code ID	*
	Enable/Disable Code 39	Enabled
	Check Character Verification	Transmit Check Character After Verification
	Code 32 Start/Stop Character	Transmit
Codabar	Code ID	%
	Enable/Disable Codabar	Enabled
	Check Character Verification	Disabled
	Codabar Start/Stop Character	Transmit
		ABCD/ABCD
Code 93	Code ID	&
	Enable/Disable Code 93	Enabled
	Check Character Verification	Transmit Check Character After Verification
GS1 Databar	Code ID	R4
	Enable/Disable GS1 Databar	Enabled
	Application Identifier “01”	Transmit
Standard 25	Code ID	s
	Enable/Disable Standard 25	Enabled
	Check Character Verification	Transmit Check Character After Verification
MSI-Plessey	Code ID	@
	Enable/Disable MSI-Plessey	Enabled
	Check Character Verification	One Check Character, MOD10
	Check Character	Transmit
PDF417	Code ID	P
	Enable/Disable PDF417	Enabled
Prefix & Suffix	Code ID Prefix	Enabled
	Terminating Character Suffix	Disabled

Chapter 9 System Settings

Scan Mode

Level Mode: A trigger pull activates a decode session. The decode session continues until a barcode is decoded or you release the trigger.

Sense Mode: The engine activates a decode session every time it detects a barcode presented to it. The decode session continues until a barcode is decoded or the decode session timeout expires. **Reread Timeout** can avoid undesired rereading of same barcode in a given period of time. **Sensitivity** can change the Sense Mode's sensibility to changes in images captured. **Image Stabilization Timeout** gives the engine time to adapt to ambient environment after it decodes a barcode and "looks" for another.

Continuous Mode: The engine automatically starts one decode session after another. To suspend/resume barcode reading, simply press the trigger. **Reread Timeout** can avoid undesired rereading of same barcode in a given period of time.

Pulse Mode: When the trigger is pulled and released, scanning is activated until a barcode is decoded or the decode session timeout expires (The decode session timeout begins when the trigger is released).

Batch Mode: A trigger pull activates a round of multiple decode sessions. This round of multiple scans continues until you release the trigger. Rereading the same barcode is not allowed in the same round.



Level Mode



Sense Mode



Continuous Mode



Pulse Mode



Batch Mode



Advanced Mode

Decode Session Timeout

This parameter sets the maximum time decode session continues during a scan attempt. It is programmable in 1ms increments from 1ms to 3,600,000ms. When it is set to 0, the timeout is infinite. This feature is only applicable to the Pulse, Sense and Level modes.



Decode Session Timeout

Set the decode session timeout to 1,500ms:

1. Scan the **Enter Setup** barcode.
2. Scan the **Decode Session Timeout** barcode.
3. Scan the numeric barcodes “1”, “5”, “0” and “0” from the “Digit Barcodes” section in Appendix.
4. Scan the **Save** barcode from the “Save/Cancel Barcodes” section in Appendix.
5. Scan the **Exit Setup** barcode.

Enter the Detection/ Reading State (Sense Mode)

Scan appropriate barcodes below to enable the engine to enter the detection state or reading state after a good read. This feature is only applicable to the Sense mode.

Enter the Detection State: The engine stops reading after a barcode is decoded or the decode session timeout expires, and then it starts reading the new barcode presented to it after the Image stabilization timeout expires.

Enter the Reading State: The engine continues reading after a barcode is decoded or the decode session timeout expires.



Enter the Detection State



Enter the Reading State

Image Stabilization Timeout (Sense Mode)

This parameter defines the amount of time the engine will spend adapting to ambient environment after it decodes a barcode and “looks” for another. It is programmable in 1ms increments from 0ms to 3,000ms.



Image Stabilization Timeout

Set the image stabilization timeout to 800ms:

1. Scan the **Enter Setup** barcode.
2. Scan the **Image Stabilization Timeout** barcode.
3. Scan the numeric barcodes “8”, “0” and “0” from the “Digit Barcodes” section in Appendix.
4. Scan the **Save** barcode from the “Save/Cancel Barcodes” section in Appendix.
5. Scan the **Exit Setup** barcode.

Image Change Trigger Sensitivity

This specifies the degree of acuteness of the engine's response to changes in images captured. There are 20 levels to choose from. The smaller the value, the higher the sensitivity and the lower requirement in image change to trigger the engine. You can select an appropriate degree of sensitivity that fits your application environment. This feature is only applicable to the Sense mode.



Low Sensitivity



Medium Sensitivity



High Sensitivity



Enhanced Sensitivity



Custom Sensitivity (Level 1-20)

Set the image change trigger sensitivity to Level 10:

1. Scan the **Enter Setup** barcode.
2. Scan the **Custom Sensitivity** barcode.
3. Scan the numeric barcodes "1" and "0" from the "Digit Barcodes" section in Appendix.
4. Scan the **Save** barcode from the "Save/Cancel Barcodes" section in Appendix.
5. Scan the **Exit Setup** barcode.

Reread Timeout

Reread Timeout can avoid undesired rereading of same barcode in a given period of time. This feature is only applicable to the Sense and Continuous modes.

To enable/disable the Reread Timeout, scan the appropriate barcode below.

Enable Reread Timeout: Do not allow the engine to re-read same barcode before the reread timeout expires.

Disable Reread Timeout: Allow the engine to re-read same barcode.



Enable Reread Timeout



Disable Reread Timeout

The following parameter sets the time interval between two successive reads on same barcode. It is programmable in 1ms increments from 0ms to 3,600,000ms. When it is set to a value greater than 3,000, the timeout for rereading same programming barcode is limited to 3,000ms.



Reread Timeout

Set the reread timeout to 1,000ms:

1. Scan the **Enter Setup** barcode.
2. Scan the **Reread Timeout** barcode.
3. Scan the numeric barcodes “1”, “0”, “0” and “0” from the “Digit Barcodes” section in Appendix.
4. Scan the **Save** barcode from the “Save/Cancel Barcodes” section in Appendix.
5. Scan the **Exit Setup** barcode.

You may wish to restart the reread timeout when the engine encounters the same barcode that was decoded in the last scan session before the reread timeout expires. To enable this feature, scan the **Reread Timeout Reset On** barcode. This feature is only effective when **Reread Timeout** is enabled.



Reread Timeout Reset On



Reread Timeout Reset Off

Good Read Delay

Good Read Delay sets the minimum amount of time before the engine can read another barcode after a good read. This parameter is programmable in 1ms increments from 1ms to 3,600,000ms. Scan the appropriate barcode below to enable or disable the delay.

@GRDENA1

Enable Good Read Delay

@GRDENA0

Disable Good Read Delay

To set the good read delay, scan the barcode below, then set the delay (from 1 to 3,600,000ms) by scanning the digit barcode(s) then scanning the **Save** barcode from the Appendix.

@GRDDUR

Good Read Delay

Set the good read delay to 1,000ms:

1. Scan the **Enter Setup** barcode.
2. Scan the **Good Read Delay** barcode.
3. Scan the numeric barcodes “1”, “0”, “0” and “0” from the “Digit Barcodes” section in Appendix.
4. Scan the **Save** barcode from the “Save/Cancel Barcodes” section in Appendix.
5. Scan the **Exit Setup** barcode.

Scanning Preference

Normal Mode: Select this mode when reading barcodes on paper.

Screen Mode: Select this mode when reading barcodes on the screen.

Barcode Pay Mode: Select this mode when reading barcodes to perform payment transactions.



Normal Mode



Screen Mode



Barcode Pay Mode

Decoding Preference

Digital barcode: Select this option when reading good-quality barcodes only. This option provides the best performance but may fail to read poor-quality barcodes.

Printed barcode: Select this option when users need to read a variety of barcodes, including poor-quality barcodes (e.g., damaged, warped or wrinkled).

Select the appropriate barcode below according to the application environment.



Digital Barcode



Printed Barcode

Decode Area

Whole Area Decoding: The engine attempts to decode barcode(s) within its field of view, from the center to the periphery, and transmits the barcode that has been first decoded.

Acuscan: The scanner only decodes the barcode aimed squarely by the aiming pattern. For those using a crosshair aiming pattern, only the barcode aimed by the center of crosshair will be decoded.

Specify Area Decoding: The engine attempts to read barcode(s) within a specified decoding area and transmits the barcode that has been first decoded. This option allows the engine to narrow its field of view to make sure it reads only those barcodes intended by the user. For instance, if multiple barcodes are placed closely together, specific area decoding in conjunction with appropriate pre-defined decoding area will insure that only the desired barcode is read.



Whole Area Decoding



Specific Area Decoding



Acusan

If **Specific Area Decoding** is enabled, the engine only reads barcodes that intersect the predefined decoding area.

You can define the decoding area using the **Top of Decoding Area**, **Bottom of Decoding Area**, **Left of Decoding Area** and **Right of Decoding Area** barcodes as well as numeric barcode(s) that represent(s) a desired percentage (0-100). The value of Bottom must be greater than that of Top; the value of Right must be greater than that of Left.

@CADDTP

Top of Decoding Area

@CADDBT

Bottom of Decoding Area

@CADDLF

Left of Decoding Area

@CADDRG

Right of Decoding Area

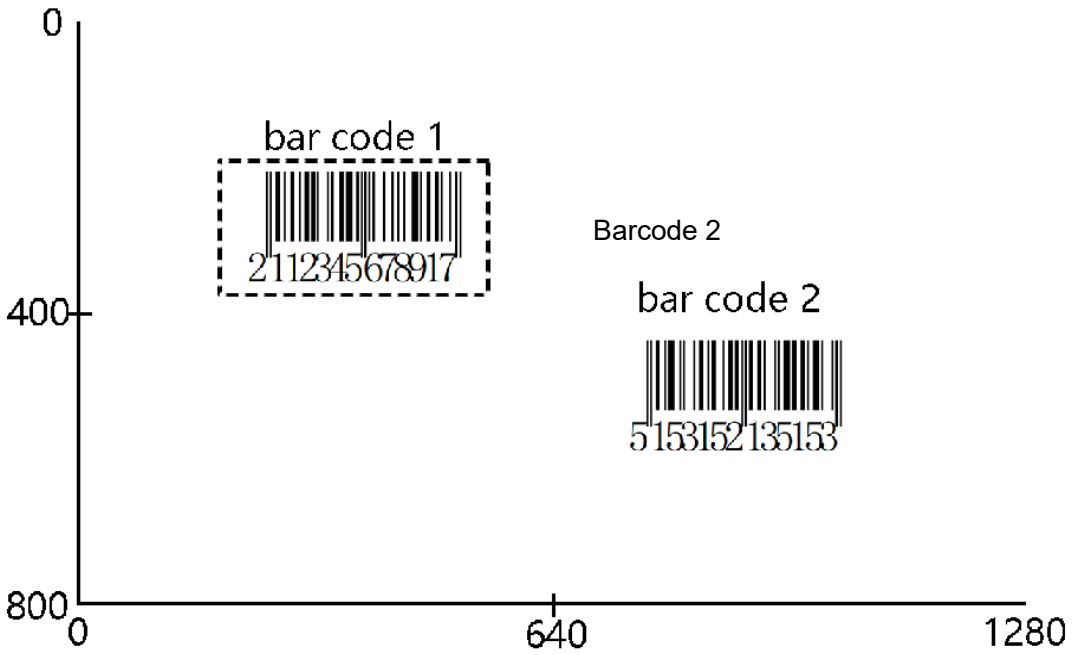

Program the engine to only read Barcode 1 in the figure above by setting the decoding area to 190 top, 350bottom, 200 left and 560 right:

1. Scan the **Enter Setup** barcode.
2. Scan the **Top of Decoding Area** barcode.
3. Scan the numeric barcode “0” from the “Digit Barcodes” section in Appendix.
4. Scan the **Save** barcode from the “Save/Cancel Barcodes” section in Appendix.
5. Scan the **Bottom of Decoding Area** barcode.
6. Scan the numeric barcodes “3”, 5” and “0” from the “Digit Barcodes” section in Appendix.
7. Scan the **Save** barcode from the “Save/Cancel Barcodes” section in Appendix.
8. Scan the **Top of Decoding Area** barcode.
9. Scan the numeric barcodes “1”, 9” and “0” from the “Digit Barcodes” section in Appendix.
10. Scan the **Save** barcode from the “Save/Cancel Barcodes” section in Appendix.
11. Scan the **Left of Decoding Area** barcode.
12. Scan the numeric barcode “0” from the “Digit Barcodes” section in Appendix.
13. Scan the **Save** barcode from the “Save/Cancel Barcodes” section in Appendix.
14. Scan the **Right of Decoding Area** barcode.
15. Scan the numeric barcodes “5”, “6” and “0” from the “Digit Barcodes” section in Appendix.
16. Scan the **Save** barcode from the “Save/Cancel Barcodes” section in Appendix.
17. Scan the **Left of Decoding Area** barcode.
18. Scan the numeric barcodes “2”, “0” and “0” from the “Digit Barcodes” section in Appendix.
19. Scan the **Save** barcode from the “Save/Cancel Barcodes” section in Appendix.
20. Scan the **Exit Setup** barcode.

Image Flipping



Do Not Flip



Flip Horizontally



Flip Vertically



Flip Horizontally & Vertically

Example of image not flipped



Example of image flipped horizontally



Example of image flipped vertically



Example of image flipped horizontally & vertically



Bad Read Message

Scan the appropriate barcode below to select whether or not to send a bad read message (user-programmable) when a good read does not occur before trigger release, or the decode session timeout expires, or the engine receives the **Stop Scanning** command (For more information, see the “Serial Trigger Command” section in this Chapter).

@NGRENA0

Bad Read Message OFF

@NGRENA1

Bad Read Message ON

Set Bad Read Message

A bad read message can contain up to 7 characters (HEX values from 0x00 to 0xFF). To set a bad read message, scan the **Set Bad Read Message** barcode, the numeric barcodes representing the hexadecimal values of desired character(s) and the **Save** barcode.



Set Bad Read Message

Set the bad read message to "F" (HEX: 0x46):

1. Scan the **Enter Setup** barcode.
2. Scan the **Set Bad Read Message** barcode.
3. Scan the numeric barcodes "4" and "6" from the "Digit Barcodes" section in Appendix.
4. Scan the **Save** barcode from the "Save/Cancel Barcodes" section in Appendix.
5. Scan the **Exit Setup** barcode.

Trigger Commands

When **Enable Trigger Commands** is selected, you can activate and deactivate the engine in the Level mode with serial trigger commands. Sending the **Start Scanning** command (default: **<SOH> T <EOT>**, user-programmable) to the engine in the Level mode activates a decode session. The decode session continues until a barcode is decoded or the decode session timeout expires or the engine receives the **Stop Scanning** command (default: **<SOH> P <EOT>**, user-programmable).



Disable Trigger Commands



Enable Trigger Commands

Modify Start Scanning Command

The **Start Scanning** command can consist of 1-10 characters (HEX values from 0x01 to 0xFF). In this command, the character "?" (HEX: 0x3F) cannot be the first character. The default **Start Scanning** command is **<SOH> T <EOT>**.



Modify Start Scanning Command

Set the Start Scanning command to "*T":

1. Scan the **Enter Setup** barcode.
2. Scan the **Modify Start Scanning Command** barcode.
3. Scan the numeric barcodes "2", "A", "5" and "4" from the "Digit Barcodes" section in Appendix.
4. Scan the **Save** barcode from the "Save/Cancel Barcodes" section in Appendix.
5. Scan the **Exit Setup** barcode.

Modify Stop Scanning Command

The **Stop Scanning** command can consist of 1-10 characters (HEX values from 0x01 to 0xFF). In this command, the character "?" (HEX: 0x3F) cannot be the first character. The default **Stop Scanning** command is **<SOH> P <EOT>**.



Modify Stop Scanning Command

Set the Stop Scanning command to "*P":

1. Scan the **Enter Setup** barcode.
2. Scan the **Modify Stop Scanning Command** barcode.
3. Scan the numeric barcodes "2", "A", "5" and "0" from the "Digit Barcodes" section in Appendix.
4. Scan the **Save** barcode from the "Save/Cancel Barcodes" section in Appendix.
5. Scan the **Exit Setup** barcode.

Illumination

A couple of illumination options are provided to improve the lighting conditions during every image capture:

Normal: Illumination LEDs are turned on during image capture.

Always On: Illumination LEDs on the engine keep on after the engine is powered on.

Off: Illumination LEDs are off all the time.



Normal



Off



Always On

Illumination Source Combination

When illumination is enabled, this setting selects the illumination sources to be turned on together.



Internal Illumination



External Illumination Pin 1



Internal Illumination + External Illumination Pin 1



External Illumination Pin 2



Internal Illumination + External Illumination Pin 2



External Illumination Pin 1 + External Illumination Pin 2



Internal Illumination + External Illumination Pin 1 + External Illumination Pin 2



External Illumination Pin 3



Internal Illumination + External Illumination Pin 3



External Illumination Pin 1 + External Illumination Pin 3



External Illumination Pin 2 + External Illumination Pin 3



Internal Illumination + External Illumination Pin 1 + External Illumination Pin 3



Internal Illumination + External Illumination Pin 2 + External Illumination Pin 3



External Illumination Pin 1 + External Illumination Pin 2 + External Illumination Pin 3



Internal Illumination + External Illumination Pin 1 + External Illumination Pin 2 + External Illumination Pin 3

External Illumination Pins

The scanner provides external illumination control pins, allowing users to design external illumination sources that can be controlled by these pins. For details, refer to **Chapter 4 - Interface Definition**.

External Illumination Pin 1 Polarity



Active Low



Active High

External Illumination Pin 2 Polarity



Active Low



Active High

External Illumination Pin 3 Polarity



Active Low



Active High

Aiming

When scanning/capturing image, the engine projects an aiming pattern which allows positioning the target barcode within its field of view and thus makes decoding easier.

Normal: The engine projects an aiming pattern only during barcode scanning/capture.

Always On: Aiming pattern is constantly on after the engine is powered on.

Off: Aiming pattern is off all the time.



Normal



Off



Always On

Good Read LED

The green LED can be programmed to be On or Off to indicate good read.



On



Off

Good Read LED Duration

This parameter sets the amount of time that the Good Read LED to remain on following a good read. It is programmable in 1ms increments from 1ms to 2,500ms.



Short (20ms)



Medium (120ms)



Long (220ms)



Prolonged (320ms)



Custom (1 - 2,500ms）

Set the Good Read LED duration to 800ms:

1. Scan the **Enter Setup** barcode.
2. Scan the **Custom** barcode.
3. Scan the numeric barcodes “8”, “0” and “0” from the “Digit Barcodes” section in Appendix.
4. Scan the **Save** barcode from the “Save/Cancel Barcodes” section in Appendix.
5. Scan the **Exit Setup** barcode.

Good Read LED Control Logic



LED On Indicates a Good Read



LED Off Indicates a Good Read

Power On Beep

The engine can be programmed to beep when it is powered on. Scan the **Off** barcode if you do not want a power on beep.



On



Off

Good Read Beep

Scanning the **Off** barcode can turn off the beep that indicates successful decode; scanning the **On** barcode can turn it back on.



On



Off

Good Read Beep Duration

This parameter sets the length of the beep the engine emits on a good read. It is programmable in 1ms increments from 20ms to 300ms.



Short (40ms)



Medium (80ms)



Long (120ms)



Custom (20 – 300ms)

Set the Good Read Beep duration to 200ms:

1. Scan the **Enter Setup** barcode.
2. Scan the **Custom** barcode.
3. Scan the numeric barcodes “2”, “0” and “0” from the “Digit Barcodes” section in Appendix.
4. Scan the **Save** barcode from the “Save/Cancel Barcodes” section in Appendix.
5. Scan the **Exit Setup** barcode.

Good Read Beep Frequency

This parameter is programmable in 1Hz increments from 20Hz to 20,000Hz.



Extra Low (800Hz)



Low (1600Hz)



Medium (2730Hz)



High (4200Hz)



Custom (20 - 20,000Hz)

Set the Good Read Beep frequency to 2,000Hz:

1. Scan the **Enter Setup** barcode.
2. Scan the **Custom** barcode.
3. Scan the numeric barcodes “2”, “0”, “0” and “0” from the “Digit Barcodes” section in Appendix.
4. Scan the **Save** barcode from the “Save/Cancel Barcodes” section in Appendix.
5. Scan the **Exit Setup** barcode.

Good Read Beep Volume

There are 20 volume levels to choose from. The bigger the value, the louder the Good Read Beep.



Loud



Medium



Low



Custom Volume (Level 1-20)

Set the Good Read Beep volume to Level 8:

1. Scan the **Enter Setup** barcode.
2. Scan the **Custom Volume** barcode.
3. Scan the numeric barcode “8” from the “Digit Barcodes” section in Appendix.
4. Scan the **Save** barcode from the “Save/Cancel Barcodes” section in Appendix.
5. Scan the **Exit Setup** barcode.

Good Read Vibration

You may choose whether or not to let the scanner vibrate when a barcode is successfully read by scanning the appropriate barcode below.



On



Off

Good Read Vibration Duration

This parameter sets the length for the Good Read Vibration. It is programmable in 1ms increments from 1ms to 2,500ms. The default setting is 100ms.



Custom (1 – 2,500ms)

Example

Set the Good Read Vibration duration to 200ms:

1. Scan the **Enter Setup** barcode.
2. Scan the **Custom** barcode.
3. Scan the numeric barcodes “2”, “0” and “0” from the “Digit Barcodes” section in Appendix.
4. Scan the **Save** barcode from the “Save/Cancel Barcodes” section in Appendix.
5. Scan the **Exit Setup** barcode.

Chapter 10 Symbologies

Introduction

Every symbology (barcode type) has its own unique attributes. This chapter provides programming barcodes for configuring the engine so that it can identify various symbologies. It is recommended to disable those that are rarely used to increase the efficiency of the engine.

Global Settings

Enable/Disable All Symbologies

If the **Disable All Symbologies** feature is enabled, the engine will not be able to read any non-programming barcodes except the programming barcodes.



Enable All Symbologies



Disable All Symbologies

Enable/Disable 1D Symbologies



Enable 1D Symbologies



Disable 1D Symbologies

Enable/Disable 2D Symbologies



Enable 2D Symbologies



Disable 2D Symbologies

Enable/Disable Postal Symbologies



Enable All Postal Symbologies



Disable All Postal Symbologies

Inverse Code

Regular barcode: Dark bars on a bright background.

Inverse barcode: Bright bars on a dark background.

- ✧ **Regular 1D Code Only:** Read regular 1D code only.
- ✧ **Inverse 1D Code Only:** Read inverse 1D codes only.
- ✧ **Both Regular & Inverse:** Read both regular and inverse 1D codes.



Regular 1D Code Only



Inverse 1D Code Only



Both Regular & Inverse

Multi-barcode



Disabled



Enabled

Multi-Barcode Reading Preference

Two modes are available: **Speed Priority** and **Quantity Priority**.

Quantity Priority: Attempts to decode as many barcodes as possible, up to the configured maximum decode count.

Speed Priority: Outputs decoded barcode data as quickly as possible. The number of decoded barcodes may not reach the configured maximum decode count.



@ALLMEN0

Quantity Priority



@ALLMEN1

Speed Priority

Minimum Total Number of Decoders

This parameter sets the minimum total number of barcodes to be decoded in multi-barcode mode.



Minimum Total Number of Decoders

Set the minimum total number of decoders to “10”:

1. Scan the **Enter Setup** barcode.
2. Scan the **minimum total number of decoders** barcode.
3. Scan the numeric barcodes “1” and “0” from the “Digit Barcodes” section in Appendix.
4. Scan the **Save** barcode from the “Save/Cancel Barcodes” section in Appendix.
5. Scan the **Exit Setup** barcode.

Maximum Total Number of Decoders

This parameter sets the maximum total number of barcodes to be decoded in multi-barcode mode.



Maximum Total Number of Decoders

Set the maximum total number of decoders to “10”:

1. Scan the **Enter Setup** barcode.
2. Scan the **the maximum total number of decoders** barcode.
3. Scan the numeric barcodes “1” and “0” from the “Digit Barcodes” section in Appendix.
4. Scan the **Save** barcode from the “Save/Cancel Barcodes” section in Appendix.
5. Scan the **Exit Setup** barcode.

Multi-barcode Separator

Separators (a comma “,”) can be inserted between/ among barcodes when reading twin codes or multi-barcode on an image. The separator can contain 1 character at most.



Modify Custom Multi-barcode Separator

Set the multi-barcode separator to “,”:

1. Scan the **Enter Setup** barcode.
2. Scan the **Modify Custom Multi-barcode Separator** barcode.
3. Scan the numeric barcodes “2” and “C” from the “Digit Barcodes” section in Appendix.
4. Scan the **Save** barcode from the “Save/Cancel Barcodes” section in Appendix.
5. Scan the **Exit Setup** barcode.

GS1 2D Barcode Transition

Disable: Disables GS1 2D barcode transition. GS1 format settings, such as GS1 Digital Link URI, take effect only when this feature is disabled.

- Mode 1: Direct output.
- Mode 2: 2D barcode priority.
- Mode 3: Multiple-barcode indication.



Disable



Mode 1



Mode 2



Mode 3

GS1 Digital Link URI

♦ Output Format

- Default Output: Settings such as Surround GS1 Application Identifiers (AIs) with Parentheses, Output GS1 Application Identifiers (AIs), and Output GS1 Check Character take effect in this mode.
- Bracketed AI Data: Encloses GS1 Application Identifiers (AIs) in parentheses.
- GS1 Digital Link URI: Outputs the data as a GS1 Digital Link URI. The URL prefix can be configured using Custom URL Prefix.
- Human-Readable Interpretation: Encloses GS1 Application Identifiers (AIs) in parentheses and separates the application identifier elements with carriage returns.



Default Output



Bracketed AI Data



GS1 Digital Link URI



Human-Readable Interpretation

Surround GS1 Application Identifiers (AI's) with Parentheses

When **Surround GS1 AI's with Parentheses** is selected, each application identifier (AI) contained in scanned data will be enclosed in parentheses in the output message.



Do Not Surround GS1 AI's with Parentheses



Surround GS1 AI's with Parentheses

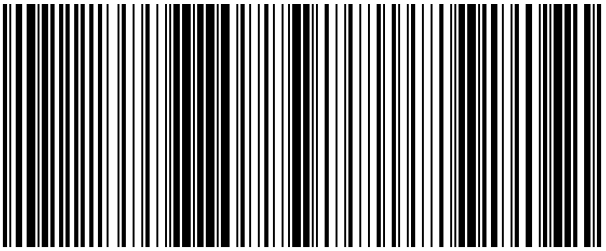

If **Surround GS1 AI's with Parentheses** is selected, the barcode above is output as (01)00614141999996(10)10ABCEDF123456.

If **Do Not Surround GS1 AI's with Parentheses** is selected, the barcode above is output as 0100614141999996 1010ABCEDF123456.

Output GS1 Application Identifier (GS1 AIs)

@GS1OAI0

Disable

@GS1OAI1

**** Enable**



If **Output GS1 Application Identifier (GS1 AIs)** is enabled, the barcode above is output as (01)00614141999996(10)10ABCEDF123456.

If **Output GS1 Application Identifier (GS1 AIs)** is disabled, the barcode above is output as 0061414199999610ABCEDF123456.

- **GS1-128(UCC/EAN-13)**



Don't Output GS1 Application Identifier (GS1 AIs)



**** Output GS1 Application Identifier (GS1 AIs)**

- **GS1 Databar(RSS)**



Don't Output GS1 Application Identifier (GS1 AIs)



**** Output GS1 Application Identifier (GS1 AIs)**

- **GS1 QR**



Don't Output GS1 Application Identifier (GS1 AIs)



**** Output GS1 Application Identifier (GS1 AIs)**

- **GS1 Data Matrix**



Don't Output GS1 Application Identifier (GS1 AIs)



**** Output GS1 Application Identifier (GS1 AIs)**

Output GS1 Check Character



Disbled



**** Enabled**



If **Output GS1 Check Character** is enabled, the barcode above is output as 0100614141999996101 0ABCEDF123456.

If **Output GS1 Check Character** is disabled, the barcode above is output as 0100614141999991010ABCEDF123456.

Code 128

Restore Factory Defaults



Restore the Factory Defaults of Code 128

Enable/Disable Code 128



**** Enable Code 128**



Disable Code 128



If the engine fails to identify Code 128 barcodes, you may first try this solution by scanning the **Enter Setup** barcode and then **Enable Code 128** barcode.

Set Length Range for Code 128

The engine can be configured to only decode Code 128 barcodes with lengths that fall between (inclusive) the minimum and maximum lengths. To accomplish it, you need to set the minimum and maximum lengths.



Set the Minimum Length



Set the Maximum Length



If minimum length is set to be greater than maximum length, the engine only decodes Code 128 barcodes with either the minimum or maximum length. If minimum length is same as maximum length, only Code 128 barcodes with that length are to be decoded.



Set the engine to decode Code 128 barcodes containing between 8 and 12 characters:

1. Scan the **Enter Setup** barcode.
2. Scan the **Set the Minimum Length** barcode.
3. Scan the numeric barcode “8” from the “Digit Barcodes” section in Appendix.
4. Scan the **Save** barcode from the “Save/Cancel Barcodes” section in Appendix.
5. Scan the **Set the Maximum Length** barcode.
6. Scan the numeric barcodes “1” and “2” from the “Digit Barcodes” section in Appendix.
7. Scan the **Save** barcode from the “Save/Cancel Barcodes” section in Appendix.
8. Scan the **Exit Setup** barcode.

Queit Size

This parameter specifies the minimum quiet zone width required on both sides of a 1D barcode. A larger value requires wider quiet zones, whereas a smaller value may increase the risk of decoding errors.



Quiet Size

Set the minimum Quiet Size to “6”:

1. Scan the **Enter Setup** barcode.
2. Scan the **Quiet Size** barcode.
3. Scan the numeric barcodes “6” from the “Digit Barcodes” section in Appendix.
4. Scan the **Save** barcode from the “Save/Cancel Barcodes” section in Appendix.
5. Scan the **Exit Setup** barcode.

Security Level

This parameter sets the number of decoding attempts required to correctly read the barcode. Higher security levels reduce misreads but slow down decoding speed.



Security Level 1



Security Level 2



Security Level 3



Security Level 4

EAN-8

Restore Factory Defaults



Restore the Factory Defaults of EAN-8

Enable/Disable EAN-8



**** Enable EAN-8**



Disable EAN-8



If the engine fails to identify EAN-8 barcodes, you may first try this solution by scanning the **Enter Setup** barcode and then **Enable EAN-8** barcode.

Transmit Check Character

EAN-8 is 8 digits in length with the last one as its check character used to verify the integrity of the data.



**** Transmit EAN-8 Check Character**



Do Not Transmit EAN-8 Check Character

2-Digit Add-On Code

An EAN-8 barcode can be augmented with a two-digit add-on code to form a new one. In the example below, the part surrounded by blue dotted line is an EAN-8 barcode while the part circled by red dotted line is a two-digit add-on code.



@EA8AD20

**** Disable 2-Digit Add-On Code**

@EA8AD21

Enable 2-Digit Add-On Code

Disable 2-Digit Add-On Code: The engine decodes EAN-8 and ignores the add-on code when presented with an EAN-8 plus 2-digit add-on barcode. It can also decode EAN-8 barcodes without 2-digit add-on codes.

Enable 2-Digit Add-On Code: The engine decodes a mix of EAN-8 barcodes with and without 2-digit add-on codes.

5-Digit Add-On Code

An EAN-8 barcode can be augmented with a five-digit add-on code to form a new one. In the example below, the part surrounded by blue dotted line is an EAN-8 barcode while the part circled by red dotted line is a five-digit add-on code.



@EA8AD50

**** Disable 5-Digit Add-On Code**

@EA8AD51

Enable 5-Digit Add-On Code

Disable 5-Digit Add-On Code: The engine decodes EAN-8 and ignores the add-on code when presented with an EAN-8 plus 5-digit add-on barcode. It can also decode EAN-8 barcodes without 5-digit add-on codes.

Enable 5-Digit Add-On Code: The engine decodes a mix of EAN-8 barcodes with and without 5-digit add-on codes.

Add-On Code Required

When **EAN-8 Add-On Code Required** is selected, the scanner will only read EAN-8 barcodes that contain add-on codes.



**** EAN-8 Add-On Code Not Required**



EAN-8 Add-On Code Required

Convert EAN-8 to EAN-13

Convert EAN-8 to EAN-13: Convert EAN-8 decoded data to EAN-13 format before transmission. After conversion, the data follows EAN-13 format and is affected by EAN-13 programming selections (e.g., Check Character).

Do Not Convert EAN-8 to EAN-13: EAN-8 decoded data is transmitted as EAN-8 data, without conversion.



**** Do Not Convert EAN-8 to EAN-13**



Convert EAN-8 to EAN-13

Security Level

This parameter sets the number of decoding attempts required to correctly read the barcode. Higher security levels reduce misreads but slow down decoding speed.



Security Level 1



Security Level 2



Security Level 3



Security Level 4

EAN-13

Restore Factory Defaults



Restore the Factory Defaults of EAN-13

Enable/Disable EAN-13



**** Enable EAN-13**



Disable EAN-13

If the engine fails to identify EAN-13 barcodes, you may first try this solution by scanning the **Enter Setup** barcode and then **Enable EAN-13** barcode.

Transmit Check Character

@E13CHK2

**** Transmit EAN-13 Check Character**

@E13CHK1

Do Not Transmit EAN-13 Check Character

2-Digit Add-On Code

An EAN-13 barcode can be augmented with a two-digit add-on code to form a new one. In the example below, the part surrounded by blue dotted line is an EAN-13 barcode while the part circled by red dotted line is a two-digit add-on code.



@E13AD20

**** Disable 2-Digit Add-On Code**

@E13AD21

Enable 2-Digit Add-On Code

Disable 2-Digit Add-On Code: The engine decodes EAN-13 and ignores the add-on code when presented with an EAN-13 plus 2-digit add-on barcode. It can also decode EAN-13 barcodes without 2-digit add-on codes.

Enable 2-Digit Add-On Code: The engine decodes a mix of EAN-13 barcodes with and without 2-digit add-on codes.

5-Digit Add-On Code

An EAN-13 barcode can be augmented with a five-digit add-on code to form a new one. In the example below, the part surrounded by blue dotted line is an EAN-13 barcode while the part circled by red dotted line is a five-digit add-on code.



@E13AD50

**** Disable 5-Digit Add-On Code**

@E13AD51

Enable 5-Digit Add-On Code

Disable 5-Digit Add-On Code: The engine decodes EAN-13 and ignores the add-on code when presented with an EAN-13 plus 5-digit add-on barcode. It can also decode EAN-13 barcodes without 5-digit add-on codes.

Enable 5-Digit Add-On Code: The engine decodes a mix of EAN-13 barcodes with and without 5-digit add-on codes.

Add-On Code Required

When **EAN-13 Add-On Code Required** is selected, the engine will only read EAN-13 barcodes that contain add-on codes.

@E13REQ0

**** EAN-13 Add-On Code Not Required**

@E13REQ1

EAN-13 Add-On Code Required

EAN-13 Beginning with 290 Add-On Code Required

This setting programs the engine to require an add-on code (2-digit or 5-digit) on EAN-13 barcodes that begin with “290”. The following settings can be programmed:

Require Add-On Code: All EAN-13 barcodes that begin with “290” must have a 2-digit or 5-digit add-on code. The EAN-13 barcode with the add-on code is then transmitted. If the required add-on code is not found, the EAN-13 barcode is discarded.

Do Not Require Add-On Code: If you have selected **Require Add-On Code**, and you want to disable this feature, scan **Do Not Require Add-On Code**. EAN-13 barcodes are handled, depending on your selection for the “Add-On Code Required” feature.



** **Do Not Require Add-On Code**



Require Add-On Code

EAN-13 Beginning with 378/379 Add-On Code Required

This setting programs the engine to require an add-on code (2-digit or 5-digit) on EAN-13 barcodes that begin with a “378” or “379”. The following settings can be programmed:

Require Add-On Code: All EAN-13 barcodes that begin with a “378” or “379” must have a 2-digit or 5-digit add-on code. The EAN-13 barcode with the add-on code is then transmitted. If the required add-on code is not found, the EAN-13 barcode is discarded.

Do Not Require Add-On Code: If you have selected **Require Add-On Code**, and you want to disable this feature, scan **Do Not Require Add-On Code**. EAN-13 barcodes are handled, depending on your selection for the “Add-On Code Required” feature.



** **Do Not Require Add-On Code**



Require Add-On Code

EAN-13 Beginning with 414/419 Add-On Code Required

This setting programs the engine to require an add-on code (2-digit or 5-digit) on EAN-13 barcodes that begin with a “414” or “419”. The following settings can be programmed:

Require Add-On Code: All EAN-13 barcodes that begin with a “414” or “419” must have a 2-digit or 5-digit add-on code. The EAN-13 barcode with the add-on code is then transmitted. If the required add-on code is not found, the EAN-13 barcode is discarded.

Do Not Require Add-On Code: If you have selected **Require Add-On Code**, and you want to disable this feature, scan **Do Not Require Add-On Code**. EAN-13 barcodes are handled, depending on your selection for the “Add-On Code Required” feature.



** **Do Not Require Add-On Code**



Require Add-On Code

EAN-13 Beginning with 434/439 Add-On Code Required

This setting programs the engine to require an add-on code (2-digit or 5-digit) on EAN-13 barcodes that begin with a “434” or “439”. The following settings can be programmed:

Require Add-On Code: All EAN-13 barcodes that begin with a “434” or “439” must have a 2-digit or 5-digit add-on code. The EAN-13 barcode with the add-on code is then transmitted. If the required add-on code is not found, the EAN-13 barcode is discarded.

Do Not Require Add-On Code: If you have selected **Require Add-On Code**, and you want to disable this feature, scan **Do Not Require Add-On Code**. EAN-13 barcodes are handled, depending on your selection for the “Add-On Code Required” feature.



** **Do Not Require Add-On Code**



Require Add-On Code

EAN-13 Beginning with 977 Add-On Code Required

This setting programs the engine to require an add-on code (2-digit or 5-digit) on EAN-13 barcodes that begin with “977”. The following settings can be programmed:

Require Add-On Code: All EAN-13 barcodes that begin with “977” must have a 2-digit or 5-digit add-on code. The EAN-13 barcode with the add-on code is then transmitted. If the required add-on code is not found, the EAN-13 barcode is discarded.

Do Not Require Add-On Code: If you have selected **Require Add-On Code**, and you want to disable this feature, scan **Do Not Require Add-On Code**. EAN-13 barcodes are handled, depending on your selection for the “Add-On Code Required” feature.



**** Do Not Require Add-On Code**



Require Add-On Code

EAN-13 Beginning with 978 Add-On Code Required

This setting programs the engine to require an add-on code (2-digit or 5-digit) on EAN-13 barcodes that begin with “978”. The following settings can be programmed:

Require Add-On Code: All EAN-13 barcodes that begin with “978” must have a 2-digit or 5-digit add-on code. The EAN-13 barcode with the add-on code is then transmitted. If the required add-on code is not found, the EAN-13 barcode is discarded.

Do Not Require Add-On Code: If you have selected **Require Add-On Code**, and you want to disable this feature, scan **Do Not Require Add-On Code**. EAN-13 barcodes are handled, depending on your selection for the “Add-On Code Required” feature.



**** Do Not Require Add-On Code**



Require Add-On Code

EAN-13 Beginning with 979 Add-On Code Required

This setting programs the engine to require an add-on code (2-digit or 5-digit) on EAN-13 barcodes that begin with “979”. The following settings can be programmed:

Require Add-On Code: All EAN-13 barcodes that begin with “979” must have a 2-digit or 5-digit add-on code. The EAN-13 barcode with the add-on code is then transmitted. If the required add-on code is not found, the EAN-13 barcode is discarded.

Do Not Require Add-On Code: If you have selected **Require Add-On Code**, and you want to disable this feature, scan **Do Not Require Add-On Code**. EAN-13 barcodes are handled, depending on your selection for the “Add-On Code Required” feature.



** **Do Not Require Add-On Code**



Require Add-On Code

Queit Size

This parameter specifies the minimum quiet zone width required on both sides of a 1D barcode. A larger value requires wider quiet zones, whereas a smaller value may increase the risk of decoding errors.

@E13QTS

Quiet Size

Set the minimum Quiet Size to “6”:

1. Scan the **Enter Setup** barcode.
2. Scan the **Quiet Size** barcode.
3. Scan the numeric barcodes “6” from the “Digit Barcodes” section in Appendix.
4. Scan the **Save** barcode from the “Save/Cancel Barcodes” section in Appendix.
5. Scan the **Exit Setup** barcode.

Security Level

This parameter sets the number of decoding attempts required to correctly read the barcode. Higher security levels reduce misreads but slow down decoding speed.



Security Level 1



Security Level 2



Security Level 3



Security Level 4

UPC-E

Restore Factory Defaults



Restore the Factory Defaults of UPC-E

Enable/Disable UPC-E



**** Enable UPC-E0**



Disable UPC-E0



Enable UPC-E1



**** Disable UPC-E1**



If the engine fails to identify UPC-E0/UPC-E1 barcodes, you may first try this solution by scanning the **Enter Setup** barcode and then **Enable UPC-E0/UPC-E1** barcode.

Transmit Check Character

UPC-E is 8 digits in length with the last one as its check character used to verify the integrity of the data.

@UPECHK2

**** Transmit UPC-E Check Character**

@UPECHK1

Do Not Transmit UPC-E Check Character

2-Digit Add-On Code

A UPC-E barcode can be augmented with a two-digit add-on code to form a new one. In the example below, the part surrounded by blue dotted line is a UPC-E barcode while the part circled by red dotted line is a two-digit add-on code.



@UPEAD20

**** Disable 2-Digit Add-On Code**

@UPEAD21

Enable 2-Digit Add-On Code

Disable 2-Digit Add-On Code: The engine decodes UPC-E and ignores the add-on code when presented with a UPC-E plus 2-digit add-on barcode. It can also decode UPC-E barcodes without 2-digit add-on codes.

Enable 2-Digit Add-On Code: The engine decodes a mix of UPC-E barcodes with and without 2-digit add-on codes.

5-Digit Add-On Code

A UPC-E barcode can be augmented with a five-digit add-on code to form a new one. In the example below, the part surrounded by blue dotted line is a UPC-E barcode while the part circled by red dotted line is a five-digit add-on code.



@UPEAD50

**** Disable 5-Digit Add-On Code**

@UPEAD51

Enable 5-Digit Add-On Code

Disable 5-Digit Add-On Code: The engine decodes UPC-E and ignores the add-on code when presented with a UPC-E plus 5-digit add-on barcode. It can also decode UPC-E barcodes without 5-digit add-on codes.

Enable 5-Digit Add-On Code: The engine decodes a mix of UPC-E barcodes with and without 5-digit add-on codes.

Add-On Code Required

When **UPC-E Add-On Code Required** is selected, the scanner will only read UPC-E barcodes that contain add-on codes.

@UPEREQ0

**** UPC-E Add-On Code Not Required**

@UPEREQ1

UPC-E Add-On Code Required

Transmit Preamble Character

Preamble characters (Country Code and System Character) can be transmitted as part of a UPC-E barcode. Select one of the following options for transmitting UPC-E preamble to the host device: transmit system character only, transmit system character and country code (“0” for USA), or transmit no preamble.



**** System Character**



No Preamble



System Character & Country Code

Convert UPC-E to UPC-A

Convert UPC-E to UPC-A: Convert UPC-E (zero suppressed) decoded data to UPC-A format before transmission. After conversion, the data follows UPC-A format and is affected by UPC-A programming selections (e.g., Preamble, Check Character).

Do Not Convert UPC-E to UPC-A: UPC-E decoded data is transmitted as UPC-E data, without conversion.



**** Do Not Convert UPC-E to UPC-A**



Convert UPC-E to UPC-A

Security Level

This parameter sets the number of decoding attempts required to correctly read the barcode. Higher security levels reduce misreads but slow down decoding speed.



Security Level 1



Security Level 2



Security Level 3



Security Level 4

UPC-A

Restore Factory Defaults

@UPADEF

Restore the Factory Defaults of UPC-A

Enable/Disable UPC-A

@UPAENA1

**** Enable UPC-A**

@UPAENA0

Disable UPC-A

If the engine fails to identify UPC-A barcodes, you may first try this solution by scanning the **Enter Setup** barcode and then **Enable UPC-A** barcode.

Transmit Check Character

UPC-A is 13 digits in length with the last one as its check character used to verify the integrity of the data.

@UPACHK2

**** Transmit UPC-A Check Character**

@UPACHK1

Do Not Transmit UPC-A Check Character

2-Digit Add-On Code

A UPC-A barcode can be augmented with a two-digit add-on code to form a new one. In the example below, the part surrounded by blue dotted line is a UPC-A barcode while the part circled by red dotted line is a two-digit add-on code.





**** Disable 2-Digit Add-On Code**



Enable 2-Digit Add-On Code

Disable 2-Digit Add-On Code: The engine decodes UPC-A and ignores the add-on code when presented with a UPC-A plus 2-digit add-on barcode. It can also decode UPC-A barcodes without 2-digit add-on codes.

Enable 2-Digit Add-On Code: The engine decodes a mix of UPC-A barcodes with and without 2-digit add-on codes.

5-Digit Add-On Code

A UPC-A barcode can be augmented with a five-digit add-on code to form a new one. In the example below, the part surrounded by blue dotted line is a UPC-A barcode while the part circled by red dotted line is a five-digit add-on code.





**** Disable 5-Digit Add-On Code**



Enable 5-Digit Add-On Code



Disable 5-Digit Add-On Code: The engine decodes UPC-A and ignores the add-on code when presented with a UPC-A plus 5-digit add-on barcode. It can also decode UPC-A barcodes without 5-digit add-on codes.

Enable 5-Digit Add-On Code: The engine decodes a mix of UPC-A barcodes with and without 5-digit add-on codes.

Add-On Code Required

When **UPC-A Add-On Code Required** is selected, the scanner will only read UPC-A barcodes that contain add-on codes.



**** UPC-A Add-On Code Not Required**



UPC-A Add-On Code Required

Transmit Preamble Character

Preamble characters (Country Code and System Character) can be transmitted as part of a UPC-A barcode. Select one of the following options for transmitting UPC-A preamble to the host device: transmit system character only, transmit system character and country code (“0” for USA), or transmit no preamble.



**** No Preamble**



System Character



System Character & Country Code

Security Level

This parameter sets the number of decoding attempts required to correctly read the barcode. Higher security levels reduce misreads but slow down decoding speed.



Security Level 1



Security Level 2



Security Level 3



Security Level 4

Coupon

UPC-A/EAN-13 with Extended Coupon Code

The following three types of coupon code + extended coupon code are supported:

- ✧ UPC-A (starting with “5”) + GS1-128
- ✧ UPC-A (starting with “5”) + GS1 Databar
- ✧ EAN-13 (starting with “99”) + GS1-128

Use the appropriate barcode below to enable or disable UPC-A/EAN-13 with Extended Coupon Code. When left on the default setting (**Off**), the engine treats Coupon Codes and Extended Coupon Codes as single bar codes.

If you scan the **Allow Concatenation** code, when the engine sees the coupon code and the extended coupon code in a single scan, it transmits both as separate symbologies. Otherwise, it transmits the first coupon code it reads.

If you scan the **Require Concatenation** code, the engine must see and read the coupon code and extended coupon code in a single read to transmit the data. No data is output unless both codes are read.

@CPNENA0

**** Off**

@CPNENA1

Allow Concatenation

@CPNENA2

Require Concatenation

When using the UPC-A Coupon feature, please ensure that **System Character** or **System Character & Country Code** is selected for the “Transmit UPC-A Preamble Character” feature.

Coupon GS1 Databar Output

If you scan coupons that have both UPC and GS1 Databar codes, you may wish to scan and output only the data from the GS1 Databar code. Scan the **GS1 Output On** barcode below to scan and output only the GS1 Databar code data.

When **GS1 Output Off** is selected, coupons that have both UPC and GS1 Databar codes are transmitted depending on your selection for the “UPC-A/EAN-13 with Extended Coupon Code” feature.



**** GS1 Output Off**



GS1 Output On

When using the UPC-A Coupon feature, please ensure that **System Character** or **System Character & Country Code** is selected for the “Transmit UPC-A Preamble Character” feature.

Interleaved 2 of 5

Restore Factory Defaults

@I25DEF

Restore the Factory Defaults of Interleaved 2 of 5

Enable/Disable Interleaved 2 of 5

@I25ENA1

**** Enable Interleaved 2 of 5**

@I25ENA0

Disable Interleaved 2 of 5

If the engine fails to identify Interleaved 2 of 5 barcodes, you may first try this solution by scanning the **Enter Setup** barcode and then **Enable Interleaved 2 of 5** barcode.

Set Length Range for Interleaved 2 of 5

The engine can be configured to only decode Interleaved 2 of 5 barcodes with lengths that fall between (inclusive) the minimum and maximum lengths. To accomplish it, you need to set the minimum and maximum lengths.



Set the Minimum Length



Set the Maximum Length



If minimum length is set to be greater than maximum length, the engine only decodes Interleaved 2 of 5 barcodes with either the minimum or maximum length. If minimum length is same as maximum length, only Interleaved 2 of 5 barcodes with that length are to be decoded.



Set the engine to decode Interleaved 2 of 5 barcodes containing between 8 and 12 characters:

1. Scan the **Enter Setup** barcode.
2. Scan the **Set the Minimum Length** barcode.
3. Scan the numeric barcode “8” from the “Digit Barcodes” section in Appendix.
4. Scan the **Save** barcode from the “Save/Cancel Barcodes” section in Appendix.
5. Scan the **Set the Maximum Length** barcode.
6. Scan the numeric barcodes “1” and “2” from the “Digit Barcodes” section in Appendix.
7. Scan the **Save** barcode from the “Save/Cancel Barcodes” section in Appendix.
8. Scan the **Exit Setup** barcode.

Check Character Verification

A check character is optional for Interleaved 2 of 5 and can be added as the last character. It is a calculated value used to verify the integrity of the data.

- ✧ **Disable:** The engine transmits Interleaved 2 of 5 barcodes as is.
- ✧ **Do Not Transmit Check Character After Verification:** The engine checks the integrity of all Interleaved 2 of 5 barcodes to verify that the data complies with the check character algorithm. Barcodes passing the check will be transmitted except the last digit, whereas those failing it will not be transmitted.
- ✧ **Transmit Check Character After Verification:** The engine checks the integrity of all Interleaved 2 of 5 barcodes to verify that the data complies with the check character algorithm. Barcodes passing the check will be transmitted, whereas those failing it will not be transmitted.

Since Interleaved 2 of 5 must always have an even number of digits, a zero may need to be added as the first digit when the check character is added. The check character is automatically generated when making Interleaved 2 of 5 barcodes.



**** Disable**



Do Not Transmit Check Character After Verification



Transmit Check Character After Verification

If the **Do Not Transmit Check Character After Verification** option is enabled, Interleaved 2 of 5 barcodes with a length that is less than the configured minimum length after having the check character excluded will not be decoded. (For example, when the **Do Not Transmit Check Character After Verification**option is enabled and the minimum length is set to 4, Interleaved 2 of 5 barcodes with a total length of 4 characters including the check character cannot be read.)

Febraban

Disable/Enable Febraban



**** Disable Febraban**



Enable Febraban, Do Not Expand



Enable Febraban, Expand

Transmit Delay per Character

Transmit Delay per Character applies to both Expanded and Unexpanded Febraban. This feature is available only when USB HID Keyboard is enabled.



**** Disable Transmit Delay per Character**



Enable Transmit Delay per Character

You may select an appropriate delay value from the options below as per your actual needs.


@FEBSDT0

0ms


@FEBSDT5

5ms


@FEBSDT10

10ms


@FEBSDT15

15ms


@FEBSDT20

20ms


@FEBSDT25

25ms


@FEBSDT30

30ms


@FEBSDT35

35ms



40ms



45ms



50ms



55ms



60ms



65ms



**** 70ms**



75ms

Transmit Delay per 12 Characters

Transmit Delay per 12 Characters applies to Expanded Febraban only. This feature is available only when USB HID Keyboard is enabled.

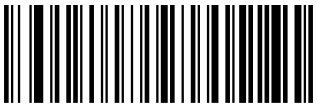
@FEBMEN0

**** Disable Transmit Delay per 12 Characters**

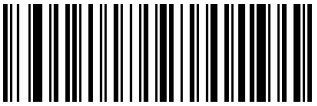
@FEBMEN1

Enable Transmit Delay per 12 Characters

You may select an appropriate delay value from the options below as per your actual needs.


@FEBMDT0

0ms


@FEBMDT1

300ms


@FEBMDT2

400ms


@FEBMDT3

**** 500ms**


@FEBMDT4

600ms


@FEBMDT5

700ms


@FEBMDT6

800ms


@FEBMDT7

900ms

Queit Size

This parameter specifies the minimum quiet zone width required on both sides of a 1D barcode. A larger value requires wider quiet zones, whereas a smaller value may increase the risk of decoding errors.



Quiet Size

Set the minimum Quiet Size to “6”:

1. Scan the **Enter Setup** barcode.
2. Scan the **Quiet Size** barcode.
3. Scan the numeric barcodes “6” from the “Digit Barcodes” section in Appendix.
4. Scan the **Save** barcode from the “Save/Cancel Barcodes” section in Appendix.
5. Scan the **Exit Setup** barcode.

Security Level

This parameter sets the number of decoding attempts required to correctly read the barcode. Higher security levels reduce misreads but slow down decoding speed.



Security Level 1



Security Level 2



Security Level 3



Security Level 4

ITF-14

ITF-14 is a special kind of Interleaved 2 of 5 with a length of 14 characters and the last character as the check character.

ITF-14 priority principle: Forthe Interleaved 2 of 5 barcodes with a length of 14 characters and the last character as the check character, the ITF-14 configurations shall take precedence over the Interleaved 2 of 5 settings.

Restore Factory Defaults



Restore the Factory Defaults of ITF-14

Enable/Disable ITF-14



**** Disable ITF-14**



Enable ITF-14 But Do Not Transmit Check Character



Enable ITF-14 and Transmit Check Character

An example of the ITF-14 priority principle: when ITF-14 is enabled and Interleaved 2 of 5 is disabled, the engine only decodes Interleaved 2 of 5 barcodes with a length of 14 characters and the last character as the check character.

Security Level

This parameter sets the number of decoding attempts required to correctly read the barcode. Higher security levels reduce misreads but slow down decoding speed.



Security Level 1



Security Level 2



Security Level 3



Security Level 4

ITF-6

ITF-6 is a special kind of Interleaved 2 of 5 with a length of 6 characters and the last character as the check character.

ITF-6 priority principle: For the Interleaved 2 of 5 barcodes with a length of 6 characters and the last character as the check character, the ITF-6 configurations shall take precedence over the Interleaved 2 of 5 settings.

Restore Factory Defaults

@IT6DEF

Restore the Factory Defaults of ITF-6

Enable/Disable ITF-6

@IT6ENA0

**** Disable ITF-6**

@IT6ENA1

Enable ITF-6 But Do Not Transmit Check Character

@IT6ENA2

Enable ITF-6 and Transmit Check Character

An example of the ITF-6 priority principle: when ITF-6 is enabled and Interleaved 2 of 5 is disabled, the engine only decodes Interleaved 2 of 5 barcodes with a length of 6 characters and the last character as the check character.

Security Level

This parameter sets the number of decoding attempts required to correctly read the barcode. Higher security levels reduce misreads but slow down decoding speed.



Security Level 1



Security Level 2



Security Level 3



Security Level 4

Matrix 2 of 5

Restore Factory Defaults



Restore the Factory Defaults of Matrix 2 of 5

Enable/Disable Matrix 2 of 5



**** Enable Matrix 2 of 5**



Disable Matrix 2 of 5

If the engine fails to identify Matrix 2 of 5 barcodes, you may first try this solution by scanning the **Enter Setup** barcode and then **Enable Matrix 2 of 5** barcode.

Set Length Range for Matrix 2 of 5

The engine can be configured to only decode Matrix 2 of 5 barcodes with lengths that fall between (inclusive) the minimum and maximum lengths. To accomplish it, you need to set the minimum and maximum lengths.



Set the Minimum Length



Set the Maximum Length



If minimum length is set to be greater than maximum length, the engine only decodes Matrix 2 of 5 barcodes with either the minimum or maximum length. If minimum length is same as maximum length, only Matrix 2 of 5 barcodes with that length are to be decoded.



Set the engine to decode Matrix 2 of 5 barcodes containing between 8 and 12 characters:

1. Scan the **Enter Setup** barcode.
2. Scan the **Set the Minimum Length** barcode.
3. Scan the numeric barcode “8” from the “Digit Barcodes” section in Appendix.
4. Scan the **Save** barcode from the “Save/Cancel Barcodes” section in Appendix.
5. Scan the **Set the Maximum Length** barcode.
6. Scan the numeric barcodes “1” and “2” from the “Digit Barcodes” section in Appendix.
7. Scan the **Save** barcode from the “Save/Cancel Barcodes” section in Appendix.
8. Scan the **Exit Setup** barcode.

Check Character Verification

A check character is optional for Matrix 2 of 5 and can be added as the last character. It is a calculated value used to verify the integrity of the data.

- ✧ **Disable:** The engine transmitsMatrix 2 of 5 barcodes as is.
- ✧ **Do Not Transmit Check Character After Verification:** The engine checks the integrity of all Matrix 2 of 5 barcodes to verify that the data complies with the check character algorithm. Barcodes passing the check will be transmitted except the last digit, whereas those failing it will not be transmitted.
- ✧ **Transmit Check Character After Verification:** The engine checks the integrity of all Matrix 2 of 5 barcodes to verify that the data complies with the check character algorithm. Barcodes passing the check will be transmitted, whereas those failing it will not be transmitted.

Since Matrix 2 of 5 must always have an even number of digits, a zero may need to be added as the first digit when the check character is added. The check character is automatically generated when making Matrix 2 of 5 barcodes.



@M25CHK0

**** Disable**



@M25CHK1

Do Not Transmit Check Character After Verification



@M25CHK2

Transmit Check Character After Verification

If the **Do Not Transmit Check Character After Verification** option is enabled, Matrix 2 of 5 barcodes with a length that is less than the configured minimum length after having the check character excluded will not be decoded. (For example, when the **Do Not Transmit Check Character After Verification** option is enabled and the minimum length is set to 4, Matrix 2 of 5 barcodes with a total length of 4 characters including the check character cannot be read.)

Security Level

This parameter sets the number of decoding attempts required to correctly read the barcode. Higher security levels reduce misreads but slow down decoding speed.



Security Level 1



Security Level 2



Security Level 3



Security Level 4

Code 39

Restore Factory Defaults



Restore the Factory Defaults of Code 39

Enable/Disable Code 39



**** Enable Code 39**



Disable Code 39



If the engine fails to identify Code 39 barcodes, you may first try this solution by scanning the **Enter Setup** barcode and then **Enable Code 39** barcode.

Set Length Range for Code 39

The engine can be configured to only decode Code 39 barcodes with lengths that fall between (inclusive) the minimum and maximum lengths. To accomplish it, you need to set the minimum and maximum lengths.



Set the Minimum Length



Set the Maximum Length



If minimum length is set to be greater than maximum length, the engine only decodes Code 39 barcodes with either the minimum or maximum length. If minimum length is same as maximum length, only Code 39 barcodes with that length are to be decoded.



Set the engine to decode Code 39 barcodes containing between 8 and 12 characters:

1. Scan the **Enter Setup** barcode.
2. Scan the **Set the Minimum Length** barcode.
3. Scan the numeric barcode “8” from the “Digit Barcodes” section in Appendix.
4. Scan the **Save** barcode from the “Save/Cancel Barcodes” section in Appendix.
5. Scan the **Set the Maximum Length** barcode.
6. Scan the numeric barcodes “1” and “2” from the “Digit Barcodes” section in Appendix.
7. Scan the **Save** barcode from the “Save/Cancel Barcodes” section in Appendix.
8. Scan the **Exit Setup** barcode.

Check Character Verification

A check character is optional for Code 39 and can be added as the last character. It is a calculated value used to verify the integrity of the data.

- **Disable:** The engine transmitsCode 39 barcodes as is.
- **Do Not Transmit Check Character After Verification:** The engine checks the integrity of all Code 39 barcodes to verify that the data complies with the check character algorithm. Barcodes passing the check will be transmitted except the last digit, whereas those failing it will not be transmitted.
- **Transmit Check Character After Verification:** The engine checks the integrity of all Code 39 barcodes to verify that the data complies with the check character algorithm. Barcodes passing the check will be transmitted, whereas those failing it will not be transmitted.



**** Disable**



Do Not Transmit Check Character After Verification



Transmit Check Character After Verification

If the **Do Not Transmit Check Character After Verification** option is enabled, Code 39 barcodes with a length that is less than the configured minimum length after having the check character excluded will not be decoded. (For example, when the **Do Not Transmit Check Character After Verification** option is enabled and the minimum length is set to 4, Code 39 barcodes with a total length of 4 characters including the check character cannot be read.)

Transmit Start/Stop Character

Code 39 uses an asterisk (*) for both the start and the stop characters. You can choose whether or not to transmit the start/stop characters by scanning the appropriate barcode below.



**** Do Not Transmit Start/Stop Character**



Transmit Start/Stop Character

Enable/Disable Code 39 Full ASCII

The engine can be configured to identify all ASCII characters by scanning the appropriate barcode below.



**** Disable Code 39 Full ASCII**



Enable Code 39 Full ASCII

Queit Size

This parameter specifies the minimum quiet zone width required on both sides of a 1D barcode. A larger value requires wider quiet zones, whereas a smaller value may increase the risk of decoding errors.



Quiet Size

Set the minimum Quiet Size to “6”:

1. Scan the **Enter Setup** barcode.
2. Scan the **Quiet Size** barcode.
3. Scan the numeric barcodes “6” from the “Digit Barcodes” section in Appendix.
4. Scan the **Save** barcode from the “Save/Cancel Barcodes” section in Appendix.
5. Scan the **Exit Setup** barcode.

Security Level

This parameter sets the number of decoding attempts required to correctly read the barcode. Higher security levels reduce misreads but slow down decoding speed.



Security Level 1



Security Level 2



Security Level 3



Security Level 4

Enable/Disable Code 32 (Italian Pharma Code)

Code 32 is a variant of Code 39 used by the Italian pharmaceutical industry. Scan the appropriate bar code below to enable or disable Code 32. Code 39 must be enabled and Code 39 check character verification must be disabled for this parameter to function.



**** Disable Code 32**



Enable Code 32

Code 32 Prefix

Scan the appropriate barcode below to enable or disable adding the prefix character “A” to all Code 32 barcodes. Code 32 must be enabled for this parameter to function.



**** Disable Code 32 Prefix**



Enable Code 32 Prefix

Transmit Code 32 Start/Stop Character

Code 32 must be enabled for this parameter to function.



**** Do Not Transmit Code 32 Start/Stop Character**



Transmit Code 32 Start/Stop Character

Transmit Code 32 Check Character

Code 32 must be enabled for this parameter to function.



**** Do Not Transmit Code 32 Check Character**



Transmit Code 32 Check Character

Codabar

Restore Factory Defaults



Restore the Factory Defaults of Codabar

Enable/Disable Codabar



**** Enable Codabar**



Disable Codabar



If the engine fails to identify Codabar barcodes, you may first try this solution by scanning the **Enter Setup** barcode and then **Enable Codabar** barcode.

Set Length Range for Codabar

The engine can be configured to only decode Codabar barcodes with lengths that fall between (inclusive) the minimum and maximum lengths. To accomplish it, you need to set the minimum and maximum lengths.



Set the Minimum Length



Set the Maximum Length



If minimum length is set to be greater than maximum length, the engine only decodes Codabar barcodes with either the minimum or maximum length. If minimum length is same as maximum length, only Codabar barcodes with that length are to be decoded.



Set the engine to decode Codabar barcodes containing between 8 and 12 characters:

1. Scan the **Enter Setup** barcode.
2. Scan the **Set the Minimum Length** barcode.
3. Scan the numeric barcode “8” from the “Digit Barcodes” section in Appendix.
4. Scan the **Save** barcode from the “Save/Cancel Barcodes” section in Appendix.
5. Scan the **Set the Maximum Length** barcode.
6. Scan the numeric barcodes “1” and “2” from the “Digit Barcodes” section in Appendix.
7. Scan the **Save** barcode from the “Save/Cancel Barcodes” section in Appendix.
8. Scan the **Exit Setup** barcode.

Check Character Verification

A check character is optional for Codabar and can be added as the last character. It is a calculated value used to verify the integrity of the data.

- **Disable:** The engine transmits Codabar barcodes as is.
- **Do Not Transmit Check Character After Verification:** The engine checks the integrity of all Codabar barcodes to verify that the data complies with the check character algorithm. Barcodes passing the check will be transmitted except the last digit, whereas those failing it will not be transmitted.
- **Transmit Check Character After Verification:** The engine checks the integrity of all Codabar barcodes to verify that the data complies with the check character algorithm. Barcodes passing the check will be transmitted, whereas those failing it will not be transmitted.



**** Disable**



Do Not Transmit Check Character After Verification



Transmit Check Character After Verification

If the **Do Not Transmit Check Character After Verification** option is enabled, Codabar barcodes with a length that is less than the configured minimum length after having the check character excluded will not be decoded. (For example, when the **Do Not Transmit Check Character After Verification** option is enabled and the minimum length is set to 4, Codabar barcodes with a total length of 4 characters including the check character cannot be read.)

Start/Stop Character

You can set the start/stop characters and choose whether or not to transmit the start/stop characters by scanning the appropriate barcode below.



**** Do Not Transmit Start/Stop Character**



Transmit Start/Stop Character



**** ABCD/ABCD as the Start/Stop Character**



ABCD/TN*E as the Start/Stop Character



abcd/abcd as the Start/Stop Character



abcd/tn*e as the Start/Stop Character

Queit Size

This parameter specifies the minimum quiet zone width required on both sides of a 1D barcode. A larger value requires wider quiet zones, whereas a smaller value may increase the risk of decoding errors.



Quiet Size

Set the minimum Quiet Size to “6”:

1. Scan the **Enter Setup** barcode.
2. Scan the **Quiet Size** barcode.
3. Scan the numeric barcodes “6” from the “Digit Barcodes” section in Appendix.
4. Scan the **Save** barcode from the “Save/Cancel Barcodes” section in Appendix.
5. Scan the **Exit Setup** barcode.

Security Level

This parameter sets the number of decoding attempts required to correctly read the barcode. Higher security levels reduce misreads but slow down decoding speed.



Security Level 1



Security Level 2



Security Level 3



Security Level 4

Code 93

Restore Factory Defaults



Restore the Factory Defaults of Code 93

Enable/Disable Code 93



Enable Code 93



**** Disable Code 93**



If the engine fails to identify Code 93 barcodes, you may first try this solution by scanning the **Enter Setup** barcode and then **Enable Code 93** barcode.

Set Length Range for Code 93

The engine can be configured to only decode Code 93 barcodes with lengths that fall between (inclusive) the minimum and maximum lengths. To accomplish it, you need to set the minimum and maximum lengths.



Set the Minimum Length



Set the Maximum Length



If minimum length is set to be greater than maximum length, the engine only decodes Code 93 barcodes with either the minimum or maximum length. If minimum length is same as maximum length, only Code 93 barcodes with that length are to be decoded.



Set the engine to decode Code 93 barcodes containing between 8 and 12 characters:

1. Scan the **Enter Setup** barcode.
2. Scan the **Set the Minimum Length** barcode.
3. Scan the numeric barcode “8” from the “Digit Barcodes” section in Appendix.
4. Scan the **Save** barcode from the “Save/Cancel Barcodes” section in Appendix.
5. Scan the **Set the Maximum Length** barcode.
6. Scan the numeric barcodes “1” and “2” from the “Digit Barcodes” section in Appendix.
7. Scan the **Save** barcode from the “Save/Cancel Barcodes” section in Appendix.
8. Scan the **Exit Setup** barcode.

Check Character Verification

Check characters are optional for Code 93 and can be added as the last two characters, which are calculated values used to verify the integrity of the data.

- **Disable:** The engine transmits Code 93 barcodes as is.
- **Do Not Transmit Check Character After Verification:** The engine checks the integrity of all Code 93 barcodes to verify that the data complies with the check character algorithm. Barcodes passing the checks will be transmitted except the last two digits, whereas those failing them will not be transmitted.
- **Transmit Check Character After Verification:** The engine checks the integrity of all Code 93 barcodes to verify that the data complies with the check character algorithm. Barcodes passing the checks will be transmitted, whereas those failing them will not be transmitted.



Disable



**** Do Not Transmit Check Character After Verification**



Transmit Check Character After Verification

If the **Do Not Transmit Check Character After Verification** option is enabled, Code 93 barcodes with a length that is less than the configured minimum length after having the two check characters excluded will not be decoded. (For example, when the **Do Not Transmit Check Character After Verification** option is enabled and the minimum length is set to 4, Code 93 barcodes with a total length of 4 characters including the two check characters cannot be read.)

Queit Size

This parameter specifies the minimum quiet zone width required on both sides of a 1D barcode. A larger value requires wider quiet zones, whereas a smaller value may increase the risk of decoding errors.



Quiet Size

Set the minimum Quiet Size to “6”:

1. Scan the **Enter Setup** barcode.
2. Scan the **Quiet Size** barcode.
3. Scan the numeric barcodes “6” from the “Digit Barcodes” section in Appendix.
4. Scan the **Save** barcode from the “Save/Cancel Barcodes” section in Appendix.
5. Scan the **Exit Setup** barcode.

Security Level

This parameter sets the number of decoding attempts required to correctly read the barcode. Higher security levels reduce misreads but slow down decoding speed.



Security Level 1



Security Level 2



Security Level 3



Security Level 4

China Post 25

Restore Factory Defaults



Restore the Factory Defaults of China Post 25

Enable/Disable China Post 25



Enable China Post 25



**** Disable China Post 25**



If the engine fails to identify China Post 25 barcodes, you may first try this solution by scanning the **Enter Setup** barcode and then **Enable China Post 25** barcode.

Set Length Range for China Post 25

The engine can be configured to only decode China Post 25 barcodes with lengths that fall between (inclusive) the minimum and maximum lengths. To accomplish it, you need to set the minimum and maximum lengths.



Set the Minimum Length



Set the Maximum Length

If minimum length is set to be greater than maximum length, the engine only decodes China Post 25 barcodes with either the minimum or maximum length. If minimum length is same as maximum length, only China Post 25 barcodes with that length are to be decoded.

Set the engine to decode China Post 25 barcodes containing between 8 and 12 characters:

1. Scan the **Enter Setup** barcode.
2. Scan the **Set the Minimum Length** barcode.
3. Scan the numeric barcode “8” from the “Digit Barcodes” section in Appendix.
4. Scan the **Save** barcode from the “Save/Cancel Barcodes” section in Appendix.
5. Scan the **Set the Maximum Length** barcode.
6. Scan the numeric barcodes “1” and “2” from the “Digit Barcodes” section in Appendix.
7. Scan the **Save** barcode from the “Save/Cancel Barcodes” section in Appendix.
8. Scan the **Exit Setup** barcode.

Check Character Verification

A check character is optional for China Post 25 and can be added as the last character. It is a calculated value used to verify the integrity of the data.

- **Disable:** The engine transmits China Post 25 barcodes as is.
- **Do Not Transmit Check Character After Verification:** The engine checks the integrity of all China Post 25 barcodes to verify that the data complies with the check character algorithm. Barcodes passing the check will be transmitted except the last digit, whereas those failing it will not be transmitted.
- **Transmit Check Character After Verification:** The engine checks the integrity of all China Post 25 barcodes to verify that the data complies with the check character algorithm. Barcodes passing the check will be transmitted, whereas those failing it will not be transmitted.



**** Disable**



Do Not Transmit Check Character After Verification



Transmit Check Character After Verification

If the **Do Not Transmit Check Character After Verification** option is enabled, China Post 25 barcodes with a length that is less than the configured minimum length after having the check character excluded will not be decoded. (For example, when the **Do Not Transmit Check Character After Verification** option is enabled and the minimum length is set to 4, China Post 25 barcodes with a total length of 4 characters including the check character cannot be read.)

Security Level

This parameter sets the number of decoding attempts required to correctly read the barcode. Higher security levels reduce misreads but slow down decoding speed.



Security Level 1



Security Level 2



Security Level 3



Security Level 4

GS1-128 (UCC/EAN-128)

Restore Factory Defaults



Restore the Factory Defaults of GS1-128

Enable/Disable GS1-128



**** Enable GS1-128**



Disable GS1-128

If the engine fails to identify GS1-128 barcodes, you may first try this solution by scanning the **Enter Setup** barcode and then **Enable GS1-128** barcode.

Set Length Range for GS1-128

The engine can be configured to only decode GS1-128 barcodes with lengths that fall between (inclusive) the minimum and maximum lengths. To accomplish it, you need to set the minimum and maximum lengths.



Set the Minimum Length



Set the Maximum Length



If minimum length is set to be greater than maximum length, the engine only decodes GS1-128 barcodes with either the minimum or maximum length. If minimum length is same as maximum length, only GS1-128 barcodes with that length are to be decoded.



Set the engine to decode GS1-128 barcodes containing between 8 and 12 characters:

1. Scan the **Enter Setup** barcode.
2. Scan the **Set the Minimum Length** barcode.
3. Scan the numeric barcode “8” from the “Digit Barcodes” section in Appendix.
4. Scan the **Save** barcode from the “Save/Cancel Barcodes” section in Appendix.
5. Scan the **Set the Maximum Length** barcode.
6. Scan the numeric barcodes “1” and “2” from the “Digit Barcodes” section in Appendix.
7. Scan the **Save** barcode from the “Save/Cancel Barcodes” section in Appendix.
8. Scan the **Exit Setup** barcode.

Transmit Check Character



Transmit GS1-128 Check Character



Do Not Transmit GS1-128 Check Character

FNC1 Transmit



Off



On

Security Level

This parameter sets the number of decoding attempts required to correctly read the barcode. Higher security levels reduce misreads but slow down decoding speed.



Security Level 1



Security Level 2



Security Level 3



Security Level 4

GS1 Databar (RSS)

Restore Factory Defaults

@RSSDEF

Restore the Factory Defaults of GS1 Databar

Enable/Disable GS1 Databar

@RSSENA1

**** Enable GS1 Databar**

@RSSENA0

Disable GS1 Databar

If the engine fails to identify GS1 Databar barcodes, you may first try this solution by scanning the **Enter Setup** barcode and then **Enable GS1 Databar** barcode.

Transmit Application Identifier “01”

@RSSTAI1

**** Transmit Application Identifier “01”**

@RSSTAI0

Do Not Transmit Application Identifier “01”

Security Level

This parameter sets the number of decoding attempts required to correctly read the barcode. Higher security levels reduce misreads but slow down decoding speed.



Security Level 1



Security Level 2



Security Level 3



Security Level 4

GS1 Composite (EAN·UCC Composite)

Restore Factory Defaults

@CPTDEF

Restore the Factory Defaults of GS1 Composite

Enable/Disable GS1 Composite

@CPTENA1

Enable GS1 Composite

@CPTENA0

**** Disable GS1 Composite**

If the engine fails to identify GS1 Composite barcodes, you may first try this solution by scanning the **Enter Setup** barcode and then **Enable GS1 Composite** barcode.

Enable/Disable UPC/EAN Composite

@CPTUPC1

Enable UPC/EAN Composite

@CPTUPC0

**** Disable UPC/EAN Composite**

Only Output 1D Barcode Data



Disabled



Enabled

Security Level

This parameter sets the number of decoding attempts required to correctly read the barcode. Higher security levels reduce misreads but slow down decoding speed.



Security Level 1



Security Level 2



Security Level 3



Security Level 4

Code 11

Restore Factory Defaults



Restore the Factory Defaults of Code 11

Enable/Disable Code 11



Enable Code 11



**** Disable Code 11**



If the engine fails to identify Code 11 barcodes, you may first try this solution by scanning the **Enter Setup** barcode and then **Enable Code 11** barcode.

Set Length Range for Code 11

The engine can be configured to only decode Code 11 barcodes with lengths that fall between (inclusive) the minimum and maximum lengths. To accomplish it, you need to set the minimum and maximum lengths.



Set the Minimum Length



Set the Maximum Length



If minimum length is set to be greater than maximum length, the engine only decodes Code 11 barcodes with either the minimum or maximum length. If minimum length is same as maximum length, only Code 11 barcodes with that length are to be decoded.



Set the engine to decode Code 11 barcodes containing between 8 and 12 characters:

1. Scan the **Enter Setup** barcode.
2. Scan the **Set the Minimum Length** barcode.
3. Scan the numeric barcode “8” from the “Digit Barcodes” section in Appendix.
4. Scan the **Save** barcode from the “Save/Cancel Barcodes” section in Appendix.
5. Scan the **Set the Maximum Length** barcode.
6. Scan the numeric barcodes “1” and “2” from the “Digit Barcodes” section in Appendix.
7. Scan the **Save** barcode from the “Save/Cancel Barcodes” section in Appendix.
8. Scan the **Exit Setup** barcode.

Check Character Verification

Check characters are optional for Code 11 and can be added as the last one or two characters, which are calculated values used to verify the integrity of the data.

If the **Disable** option is enabled, the engine transmits Code 11 barcodes as is.



Disable



**** One Check Character, MOD11**



Two Check Characters, MOD11/MOD11



Two Check Characters, MOD11/MOD9



One Check Character, MOD11 (Len<=10)

Two Check Characters, MOD11/MOD11(Len>10)



One Check Character, MOD11 (Len<=10)

Two Check Characters, MOD11/MOD9 (Len>10)

Transmit Check Character



Do Not Transmit Code 11 Check Character



**** Transmit Code 11 Check Character**

If you select a check character algorithm and the **Do Not Transmit Check Character** option, Code 11 barcodes with a length that is less than the configured minimum length after having the check character(s) excluded will not be decoded. (For example, when the **One Check Character, MOD11** and **Do Not Transmit Check Character** options are enabled and the minimum length is set to 4, Code 11 barcodes with a total length of 4 characters including the check character cannot be read.)

Security Level

This parameter sets the number of decoding attempts required to correctly read the barcode. Higher security levels reduce misreads but slow down decoding speed.



Security Level 1



Security Level 2



Security Level 3



Security Level 4

ISBN

Restore Factory Defaults



Restore the Factory Defaults of ISBN

Enable/Disable ISBN



Enable ISBN



**** Disable ISBN**



If the engine fails to identify ISBN barcodes, you may first try this solution by scanning the **Enter Setup** barcode and then **Enable ISBN** barcode.

Set ISBN Format



**** ISBN-10**



ISBN-13

Security Level

This parameter sets the number of decoding attempts required to correctly read the barcode. Higher security levels reduce misreads but slow down decoding speed.



Security Level 1



Security Level 2



Security Level 3

ISSN

Restore Factory Defaults



Restore the Factory Defaults of ISSN

Enable/Disable ISSN



Enable ISSN



**** Disable ISSN**



If the engine fails to identify ISSN barcodes, you may first try this solution by scanning the **Enter Setup** barcode and then **Enable ISSN** barcode.

Security Level

This parameter sets the number of decoding attempts required to correctly read the barcode. Higher security levels reduce misreads but slow down decoding speed.



Security Level 1



Security Level 2



Security Level 3



Security Level 4

Industrial 25

Restore Factory Defaults



Restore the Factory Defaults of Industrial 25

Enable/Disable Industrial 25



Enable Industrial 25



**** Disable Industrial 25**



If the engine fails to identify Industrial 25 barcodes, you may first try this solution by scanning the **Enter Setup** barcode and then **Enable Industrial 25** barcode.

Set Length Range for Industrial 25

The engine can be configured to only decode Industrial 25 barcodes with lengths that fall between (inclusive) the minimum and maximum lengths. To accomplish it, you need to set the minimum and maximum lengths.



Set the Minimum Length



Set the Maximum Length

If minimum length is set to be greater than maximum length, the engine only decodes Industrial 25 barcodes with either the minimum or maximum length. If minimum length is same as maximum length, only Industrial 25 barcodes with that length are to be decoded.

Set the engine to decode Industrial 25 barcodes containing between 8 and 12 characters:

1. Scan the **Enter Setup** barcode.
2. Scan the **Set the Minimum Length** barcode.
3. Scan the numeric barcode “8” from the “Digit Barcodes” section in Appendix.
4. Scan the **Save** barcode from the “Save/Cancel Barcodes” section in Appendix.
5. Scan the **Set the Maximum Length** barcode.
6. Scan the numeric barcodes “1” and “2” from the “Digit Barcodes” section in Appendix.
7. Scan the **Save** barcode from the “Save/Cancel Barcodes” section in Appendix.
8. Scan the **Exit Setup** barcode.

Check Character Verification

A check character is optional for Industrial 25 and can be added as the last character. It is a calculated value used to verify the integrity of the data.

- **Disable:** The engine transmits Industrial 25 barcodes as is.
- **Do Not Transmit Check Character After Verification:** The engine checks the integrity of all Industrial 25 barcodes to verify that the data complies with the check character algorithm. Barcodes passing the check will be transmitted except the last digit, whereas those failing it will not be transmitted.
- **Transmit Check Character After Verification:** The engine checks the integrity of all Industrial 25 barcodes to verify that the data complies with the check character algorithm. Barcodes passing the check will be transmitted, whereas those failing it will not be transmitted.



**** Disable**



Do Not Transmit Check Character After Verification



Transmit Check Character After Verification

If the **Do Not Transmit Check Character After Verification** option is enabled, Industrial 25 barcodes with a length that is less than the configured minimum length after having the check character excluded will not be decoded. (For example, when the **Do Not Transmit Check Character After Verification** option is enabled and the minimum length is set to 4, Industrial 25 barcodes with a total length of 4 characters including the check character cannot be read.)

Security Level

This parameter sets the number of decoding attempts required to correctly read the barcode. Higher security levels reduce misreads but slow down decoding speed.



Security Level 1



Security Level 2



Security Level 3



Security Level 4

Standard 25

Restore Factory Defaults



Restore the Factory Defaults of Standard 25

Enable/Disable Standard 25



Enable Standard 25



**** Disable Standard 25**



If the engine fails to identify Standard 25 barcodes, you may first try this solution by scanning the **Enter Setup** barcode and then **Enable Standard 25** barcode.

Set Length Range for Standard 25

The engine can be configured to only decode Standard 25 barcodes with lengths that fall between (inclusive) the minimum and maximum lengths. To accomplish it, you need to set the minimum and maximum lengths.



Set the Minimum Length



Set the Maximum Length



If minimum length is set to be greater than maximum length, the engine only decodes Standard 25 barcodes with either the minimum or maximum length. If minimum length is same as maximum length, only Standard 25 barcodes with that length are to be decoded.



Set the engine to decode Standard 25 barcodes containing between 8 and 12 characters:

1. Scan the **Enter Setup** barcode.
2. Scan the **Set the Minimum Length** barcode.
3. Scan the numeric barcode “8” from the “Digit Barcodes” section in Appendix.
4. Scan the **Save** barcode from the “Save/Cancel Barcodes” section in Appendix.
5. Scan the **Set the Maximum Length** barcode.
6. Scan the numeric barcodes “1” and “2” from the “Digit Barcodes” section in Appendix.
7. Scan the **Save** barcode from the “Save/Cancel Barcodes” section in Appendix.
8. Scan the **Exit Setup** barcode.

Check Character Verification

A check character is optional for Standard 25 and can be added as the last character. It is a calculated value used to verify the integrity of the data.

- **Disable:** The engine transmits Standard 25 barcodes as is.
- **Do Not Transmit Check Character After Verification:** The engine checks the integrity of all Standard 25 barcodes to verify that the data complies with the check character algorithm. Barcodes passing the check will be transmitted except the last digit, whereas those failing it will not be transmitted.
- **Transmit Check Character After Verification:** The engine checks the integrity of all Standard 25 barcodes to verify that the data complies with the check character algorithm. Barcodes passing the check will be transmitted, whereas those failing it will not be transmitted.



**** Disable**



Do Not Transmit Check Character After Verification



Transmit Check Character After Verification

If the **Do Not Transmit Check Character After Verification** option is enabled, Standard 25 barcodes with a length that is less than the configured minimum length after having the check character excluded will not be decoded. (For example, when the **Do Not Transmit Check Character After Verification** option is enabled and the minimum length is set to 4, Standard 25 barcodes with a total length of 4 characters including the check character cannot be read.)

Security Level

This parameter sets the number of decoding attempts required to correctly read the barcode. Higher security levels reduce misreads but slow down decoding speed.



Security Level 1



Security Level 2



Security Level 3



Security Level 4

Plessey

Restore Factory Defaults



Restore the Factory Defaults of Plessey

Enable/Disable Plessey



Enable Plessey



**** Disable Plessey**



If the engine fails to identify Plessey barcodes, you may first try this solution by scanning the **Enter Setup** barcode and then **Enable Plessey** barcode.

Set Length Range for Plessey

The engine can be configured to only decode Plessey barcodes with lengths that fall between (inclusive) the minimum and maximum lengths. To accomplish it, you need to set the minimum and maximum lengths.



Set the Minimum Length (Default: 4)



Set the Maximum Length (Default: 48)



If minimum length is set to be greater than maximum length, the engine only decodes Plessey barcodes with either the minimum or maximum length. If minimum length is same as maximum length, only Plessey barcodes with that length are to be decoded.



Set the engine to decode Plessey barcodes containing between 8 and 12 characters:

1. Scan the **Enter Setup** barcode.
2. Scan the **Set the Minimum Length** barcode.
3. Scan the numeric barcode “8” from the “Digit Barcodes” section in Appendix.
4. Scan the **Save** barcode from the “Save/Cancel Barcodes” section in Appendix.
5. Scan the **Set the Maximum Length** barcode.
6. Scan the numeric barcodes “1” and “2” from the “Digit Barcodes” section in Appendix.
7. Scan the **Save** barcode from the “Save/Cancel Barcodes” section in Appendix.
8. Scan the **Exit Setup** barcode.

Check Character Verification

Check characters are optional for Plessey and can be added as the last two characters, which are calculated values used to verify the integrity of the data.

- **Disable:** The engine transmits Plessey barcodes as is.
- **Do Not Transmit Check Character After Verification:** The engine checks the integrity of all Plessey barcodes to verify that the data complies with the check character algorithm. Barcodes passing the checks will be transmitted except the last two digits, whereas those failing them will not be transmitted.
- **Transmit Check Character After Verification:** The engine checks the integrity of all Plessey barcodes to verify that the data complies with the check character algorithm. Barcodes passing the checks will be transmitted, whereas those failing them will not be transmitted.



**** Disable**



Do Not Transmit Check Character After Verification



Transmit Check Character After Verification

If the **Do Not Transmit Check Character After Verification** option is enabled, Plessey barcodes with a length that is less than the configured minimum length after having the check characters excluded will not be decoded. (For example, when the **Do Not Transmit Check Character After Verification** option is enabled and the minimum length is set to 4, Plessey barcodes with a total length of 4 characters including the check characters cannot be read.)

Security Level

This parameter sets the number of decoding attempts required to correctly read the barcode. Higher security levels reduce misreads but slow down decoding speed.



Security Level 1



Security Level 2



Security Level 3



Security Level 4

MSI-Plessey

Restore Factory Defaults



Restore the Factory Defaults of MSI-Plessey

Enable/Disable MSI-Plessey



Enable MSI-Plessey



**** Disable MSI-Plessey**



If the engine fails to identify MSI-Plessey barcodes, you may first try this solution by scanning the **Enter Setup** barcode and then **Enable MSI-Plessey** barcode.

Set Length Range for MSI-Plessey

The engine can be configured to only decode MSI-Plessey barcodes with lengths that fall between (inclusive) the minimum and maximum lengths. To accomplish it, you need to set the minimum and maximum lengths.



Set the Minimum Length



Set the Maximum Length



If minimum length is set to be greater than maximum length, the engine only decodes MSI-Plessey barcodes with either the minimum or maximum length. If minimum length is same as maximum length, only MSI-Plessey barcodes with that length are to be decoded.



Set the engine to decode MSI-Plessey barcodes containing between 8 and 12 characters:

1. Scan the **Enter Setup** barcode.
2. Scan the **Set the Minimum Length** barcode.
3. Scan the numeric barcode “8” from the “Digit Barcodes” section in Appendix.
4. Scan the **Save** barcode from the “Save/Cancel Barcodes” section in Appendix.
5. Scan the **Set the Maximum Length** barcode.
6. Scan the numeric barcodes “1” and “2” from the “Digit Barcodes” section in Appendix.
7. Scan the **Save** barcode from the “Save/Cancel Barcodes” section in Appendix.
8. Scan the **Exit Setup** barcode.

Check Character Verification

Check characters are optional for MSI-Plessey and can be added as the last one or two characters, which are calculated values used to verify the integrity of the data.

If the **Disable** option is enabled, the engine transmits MSI-Plessey barcodes as is.



Disable



**** One Check Character, MOD10**



Two Check Characters, MOD10/MOD10



Two Check Characters, MOD10/MOD11

Transmit Check Character



** **Transmit MSI-Plessey Check Character**



Do Not Transmit MSI-Plessey Check Character

If you select a check character algorithm and the **Do Not Transmit Check Character** option, MSI-Plessey barcodes with a length that is less than the configured minimum length after having the check character(s) excluded will not be decoded. (For example, when the **One Check Character, MOD10** and **Do Not Transmit Check Character** options are enabled and the minimum length is set to 4, MSI-Plessey barcodes with a total length of 4 characters including the check character cannot be read.)

Security Level

This parameter sets the number of decoding attempts required to correctly read the barcode. Higher security levels reduce misreads but slow down decoding speed.



Security Level 1



Security Level 2



Security Level 3



Security Level 4

AIM 128

Restore Factory Defaults



Restore the Factory Defaults of AIM 128

Enable/Disable AIM 128



Enable AIM 128



**** Disable AIM 128**



If the engine fails to identify AIM 128 barcodes, you may first try this solution by scanning the **Enter Setup** barcode and then **Enable AIM 128** barcode.

Set Length Range for AIM 128

The engine can be configured to only decode AIM 128 barcodes with lengths that fall between (inclusive) the minimum and maximum lengths. To accomplish it, you need to set the minimum and maximum lengths.



Set the Minimum Length



Set the Maximum Length



If minimum length is set to be greater than maximum length, the engine only decodes AIM 128 barcodes with either the minimum or maximum length. If minimum length is same as maximum length, only AIM 128 barcodes with that length are to be decoded.



Set the engine to decode AIM 128 barcodes containing between 8 and 12 characters:

1. Scan the **Enter Setup** barcode.
2. Scan the **Set the Minimum Length** barcode.
3. Scan the numeric barcode “8” from the “Digit Barcodes” section in Appendix.
4. Scan the **Save** barcode from the “Save/Cancel Barcodes” section in Appendix.
5. Scan the **Set the Maximum Length** barcode.
6. Scan the numeric barcodes “1” and “2” from the “Digit Barcodes” section in Appendix.
7. Scan the **Save** barcode from the “Save/Cancel Barcodes” section in Appendix.
8. Scan the **Exit Setup** barcode.

Transmit Check Character



Transmit AIM 128 Check Character



Do Not Transmit AIM128 Check Character

FNC1 Transmit



Off



On

Security Level

This parameter sets the number of decoding attempts required to correctly read the barcode. Higher security levels reduce misreads but slow down decoding speed.



Security Level 1



Security Level 2



Security Level 3



Security Level 4

ISBT 128

Restore Factory Defaults



Restore the Factory Defaults of ISBT 128

Enable/Disable ISBT 128



Enable ISBT 128



**** Disable ISBT 128**



If the engine fails to identify ISBT 128 barcodes, you may first try this solution by scanning the **Enter Setup** barcode and then **Enable ISBT 128** barcode.

Security Level

This parameter sets the number of decoding attempts required to correctly read the barcode. Higher security levels reduce misreads but slow down decoding speed.



Security Level 1



Security Level 2



Security Level 3



Security Level 4

Code 49

Restore Factory Defaults



Restore the Factory Defaults of Code 49

Enable/Disable Code 49



Enable Code 49



**** Disable Code 49**



If the engine fails to identify Code 49 barcodes, you may first try this solution by scanning the **Enter Setup** barcode and then **Enable Code 49** barcode.

Set Length Range for Code 49

The engine can be configured to only decode Code 49 barcodes with lengths that fall between (inclusive) the minimum and maximum lengths. To accomplish it, you need to set the minimum and maximum lengths.



Set the Minimum Length



Set the Maximum Length



If minimum length is set to be greater than maximum length, the engine only decodes Code 49 barcodes with either the minimum or maximum length. If minimum length is same as maximum length, only Code 49 barcodes with that length are to be decoded.



Set the engine to decode Code 49 barcodes containing between 8 and 12 characters:

1. Scan the **Enter Setup** barcode.
2. Scan the **Set the Minimum Length** barcode.
3. Scan the numeric barcode “8” from the “Digit Barcodes” section in Appendix.
4. Scan the **Save** barcode from the “Save/Cancel Barcodes” section in Appendix.
5. Scan the **Set the Maximum Length** barcode.
6. Scan the numeric barcodes “1” and “2” from the “Digit Barcodes” section in Appendix.
7. Scan the **Save** barcode from the “Save/Cancel Barcodes” section in Appendix.
8. Scan the **Exit Setup** barcode.

Security Level

This parameter sets the number of decoding attempts required to correctly read the barcode. Higher security levels reduce misreads but slow down decoding speed.



Security Level 1



Security Level 2



Security Level 3



Security Level 4

Code 16K

Restore Factory Defaults



Restore the Factory Defaults of Code 16K

Enable/Disable Code 16K



Enable Code 16K



**** Disable Code 16K**

If the engine fails to identify Code 16K barcodes, you may first try this solution by scanning the **Enter Setup** barcode and then **Enable Code 16K** barcode.

Set Length Range for Code 16K

The engine can be configured to only decode Code 16K barcodes with lengths that fall between (inclusive) the minimum and maximum lengths. To accomplish it, you need to set the minimum and maximum lengths.

@16KMIN

Set the Minimum Length

@16KMAX

Set the Maximum Length

If minimum length is set to be greater than maximum length, the engine only decodes Code 16K barcodes with either the minimum or maximum length. If minimum length is same as maximum length, only Code 16K barcodes with that length are to be decoded.

Set the engine to decode Code 16K barcodes containing between 8 and 12 characters:

1. Scan the **Enter Setup** barcode.
2. Scan the **Set the Minimum Length** barcode.
3. Scan the numeric barcode “8” from the “Digit Barcodes” section in Appendix.
4. Scan the **Save** barcode from the “Save/Cancel Barcodes” section in Appendix.
5. Scan the **Set the Maximum Length** barcode.
6. Scan the numeric barcodes “1” and “2” from the “Digit Barcodes” section in Appendix.
7. Scan the **Save** barcode from the “Save/Cancel Barcodes” section in Appendix.
8. Scan the **Exit Setup** barcode.

Security Level

This parameter sets the number of decoding attempts required to correctly read the barcode. Higher security levels reduce misreads but slow down decoding speed.



Security Level 1



Security Level 2



Security Level 3



Security Level 4

COOP 25

Restore Factory Defaults



Restore the Factory Defaults of COOP 25

Enable/Disable COOP 25



Enable COOP 25



**** Disable COOP 25**



If the engine fails to identify COOP 25 barcodes, you may first try this solution by scanning the **Enter Setup** barcode and then **Enable COOP 25** barcode.

Set Length Range for COOP 25

The engine can be configured to only decode COOP 25 barcodes with lengths that fall between (inclusive) the minimum and maximum lengths. To accomplish it, you need to set the minimum and maximum lengths.



Set the Minimum Length



Set the Maximum Length



If minimum length is set to be greater than maximum length, the engine only decodes COOP 25 barcodes with either the minimum or maximum length. If minimum length is same as maximum length, only COOP 25 barcodes with that length are to be decoded.



Set the engine to decode COOP 25 barcodes containing between 8 and 12 characters:

1. Scan the **Enter Setup** barcode.
2. Scan the **Set the Minimum Length** barcode.
3. Scan the numeric barcode “8” from the “Digit Barcodes” section in Appendix.
4. Scan the **Save** barcode from the “Save/Cancel Barcodes” section in Appendix.
5. Scan the **Set the Maximum Length** barcode.
6. Scan the numeric barcodes “1” and “2” from the “Digit Barcodes” section in Appendix.
7. Scan the **Save** barcode from the “Save/Cancel Barcodes” section in Appendix.
8. Scan the **Exit Setup** barcode.

Check Character Verification



**** Disable**



Do Not Transmit Check Character After Verification



Transmit Check Character After Verification

Security Level

This parameter sets the number of decoding attempts required to correctly read the barcode. Higher security levels reduce misreads but slow down decoding speed.



Security Level 1



Security Level 2



Security Level 3



Security Level 4

PDF417

Restore Factory Defaults



Restore the Factory Defaults of PDF417

Enable/Disable PDF417



**** Enable PDF417**



Disable PDF417



If the engine fails to identify PDF417 barcodes, you may first try this solution by scanning the **Enter Setup** barcode and then **Enable PDF417** barcode.

Set Length Range for PDF417

The engine can be configured to only decode PDF417 barcodes with lengths that fall between (inclusive) the minimum and maximum lengths. To accomplish it, you need to set the minimum and maximum lengths.

@PDFMIN

Set the Minimum Length

@PDFMAX

Set the Maximum Length

Minimum length is not allowed to be greater than maximum length. If you only want to read PDF417 barcodes with a specific length, set both minimum and maximum lengths to be that desired length.

Set the engine to decode PDF417 barcodes containing between 8 and 12 characters:

1. Scan the **Enter Setup** barcode.
2. Scan the **Set the Minimum Length** barcode.
3. Scan the numeric barcode “8” from the “Digit Barcodes” section in Appendix.
4. Scan the **Save** barcode from the “Save/Cancel Barcodes” section in Appendix.
5. Scan the **Set the Maximum Length** barcode.
6. Scan the numeric barcodes “1” and “2” from the “Digit Barcodes” section in Appendix.
7. Scan the **Save** barcode from the “Save/Cancel Barcodes” section in Appendix.
8. Scan the **Exit Setup** barcode.

PDF417 Inverse

Regular barcode: Dark bars on a bright background.

Inverse barcode: Bright bars on a dark background.



**** Decode Regular PDF417 Barcodes Only**



Decode Inverse PDF417 Barcodes Only



Decode Both

Character Encoding



**** Default Character Encoding**



UTF-8

PDF417 ECI Output



Disable PDF417 ECI Output



**** Enable PDF417 ECI Output**

Micro PDF417

Restore Factory Defaults



Restore the Factory Defaults of Micro PDF417

Enable/Disable Micro PDF417



Enable Micro PDF417



**** Disable Micro PDF417**



If the engine fails to identify Micro PDF417 barcodes, you may first try this solution by scanning the **Enter Setup** barcode and then **Enable Micro PDF417** barcode.

Set Length Range for Micro PDF417

The engine can be configured to only decode Micro PDF417 barcodes with lengths that fall between (inclusive) the minimum and maximum lengths. To accomplish it, you need to set the minimum and maximum lengths.



Set the Minimum Length



Set the Maximum Length



Minimum length is not allowed to be greater than maximum length. If you only want to read Micro PDF417 barcodes with a specific length, set both minimum and maximum lengths to be that desired length.



Set the engine to decode Micro PDF417 barcodes containing between 8 and 12 characters:

1. Scan the **Enter Setup** barcode.
2. Scan the **Set the Minimum Length** barcode.
3. Scan the numeric barcode “8” from the “Digit Barcodes” section in Appendix.
4. Scan the **Save** barcode from the “Save/Cancel Barcodes” section in Appendix.
5. Scan the **Set the Maximum Length** barcode.
6. Scan the numeric barcodes “1” and “2” from the “Digit Barcodes” section in Appendix.
7. Scan the **Save** barcode from the “Save/Cancel Barcodes” section in Appendix.
8. Scan the **Exit Setup** barcode.

QR Code

Restore Factory Defaults



Restore the Factory Defaults of QR Code

Enable/Disable QR Code



**** Enable QR Code**



Disable QR Code



If the engine fails to identify QR Code barcodes, you may first try this solution by scanning the **Enter Setup** barcode and then **Enable QR Code** barcode.

Set Length Range for QR Code

The engine can be configured to only decode QR Code barcodes with lengths that fall between (inclusive) the minimum and maximum lengths. To accomplish it, you need to set the minimum and maximum lengths.



Set the Minimum Length



Set the Maximum Length

Minimum length is not allowed to be greater than maximum length. If you only want to read QR Code barcodes with a specific length, set both minimum and maximum lengths to be that desired length.

Set the engine to decode QR Code barcodes containing between 8 and 12 characters:

1. Scan the **Enter Setup** barcode.
2. Scan the **Set the Minimum Length** barcode.
3. Scan the numeric barcode “8” from the “Digit Barcodes” section in Appendix.
4. Scan the **Save** barcode from the “Save/Cancel Barcodes” section in Appendix.
5. Scan the **Set the Maximum Length** barcode.
6. Scan the numeric barcodes “1” and “2” from the “Digit Barcodes” section in Appendix.
7. Scan the **Save** barcode from the “Save/Cancel Barcodes” section in Appendix.
8. Scan the **Exit Setup** barcode.

QR Inverse

Regular barcode: Dark bars on a bright background.

Inverse barcode: Bright bars on a dark background.



**** Decode Regular QR Barcodes Only**



Decode Inverse QR Barcodes Only



Decode Both

Character Encoding



**** Default Character Encoding**



UTF-8

QR ECI Output



Disable QR ECI Output



**** Enable QR ECI Output**

URL QR

URL QR code refers to QR code whose barcode data begins with the http or HTTP.



Disable URL QR



Enable URL QR

- **Custom URL QR**

You can append to the QR barcode data several user-defined strings (separated by “|”) that cannot exceed 64 characters, including separators (HEX values from 0x00 to 0xFF). When URL QR is enabled, the scanner will not read the QR code whose barcode data starts with custom strings.

Micro QR Code

Restore Factory Defaults



Restore the Factory Defaults of Micro QR

Enable/Disable Micro QR



**** Enable Micro QR**



Disable Micro QR



If the engine fails to identify Micro QR barcodes, you may first try this solution by scanning the **Enter Setup** barcode and then **Enable Micro QR** barcode.

Set Length Range for Micro QR

The engine can be configured to only decode Micro QR barcodes with lengths that fall between (inclusive) the minimum and maximum lengths. To accomplish it, you need to set the minimum and maximum lengths.



Set the Minimum Length



Set the Maximum Length

Minimum length is not allowed to be greater than maximum length. If you only want to read Micro QR barcodes with a specific length, set both minimum and maximum lengths to be that desired length.

Set the engine to decode Micro QR Code barcodes containing between 8 and 12 characters:

1. Scan the **Enter Setup** barcode.
2. Scan the **Set the Minimum Length** barcode.
3. Scan the numeric barcode “8” from the “Digit Barcodes” section in Appendix.
4. Scan the **Save** barcode from the “Save/Cancel Barcodes” section in Appendix.
5. Scan the **Set the Maximum Length** barcode.
6. Scan the numeric barcodes “1” and “2” from the “Digit Barcodes” section in Appendix.
7. Scan the **Save** barcode from the “Save/Cancel Barcodes” section in Appendix.
8. Scan the **Exit Setup** barcode.

Aztec

Restore Factory Defaults



Restore the Factory Defaults of Aztec Code

Enable/Disable Aztec Code



Enable Aztec Code



**** Disable Aztec Code**



If the engine fails to identify Aztec Code barcodes, you may first try this solution by scanning the **Enter Setup** barcode and then **Enable Aztec Code** barcode.

Set Length Range for Aztec Code

The engine can be configured to only decode Aztec barcodes with lengths that fall between (inclusive) the minimum and maximum lengths. To accomplish it, you need to set the minimum and maximum lengths.



Set the Minimum Length



Set the Maximum Length

Minimum length is not allowed to be greater than maximum length. If you only want to read Aztec barcodes with a specific length, set both minimum and maximum lengths to be that desired length.

Set the engine to decode Aztec barcodes containing between 8 and 12 characters:

1. Scan the **Enter Setup** barcode.
2. Scan the **Set the Minimum Length** barcode.
3. Scan the numeric barcode “8” from the “Digit Barcodes” section in Appendix.
4. Scan the **Save** barcode from the “Save/Cancel Barcodes” section in Appendix.
5. Scan the **Set the Maximum Length** barcode.
6. Scan the numeric barcodes “1” and “2” from the “Digit Barcodes” section in Appendix.
7. Scan the **Save** barcode from the “Save/Cancel Barcodes” section in Appendix.
8. Scan the **Exit Setup** barcode.

Aztec Inverse

Regular barcode: Dark bars on a bright background.

Inverse barcode: Bright bars on a dark background.



Decode Regular Aztec Barcodes Only



Decode Inverse Aztec Barcodes Only



Decode Both

Character Encoding



**** Default Character Encoding**



UTF-8

Aztec ECI Output



Disable Aztec ECI Output



**** Enable Aztec ECI Output**

Data Matrix

Restore Factory Defaults



Restore the Factory Defaults of Data Matrix

Enable/Disable Data Matrix



**** Enable Data Matrix**



Disable Data Matrix



If the engine fails to identify Data Matrix barcodes, you may first try this solution by scanning the **Enter Setup** barcode and then **Enable Data Matrix** barcode.

Set Length Range for Data Matrix

The engine can be configured to only decode Data Matrix barcodes with lengths that fall between (inclusive) the minimum and maximum lengths. To accomplish it, you need to set the minimum and maximum lengths.



Set the Minimum Length



Set the Maximum Length



Minimum length is not allowed to be greater than maximum length. If you only want to read Data Matrix barcodes with a specific length, set both minimum and maximum lengths to be that desired length.



Set the engine to decode Data Matrix barcodes containing between 8 and 12 characters:

1. Scan the **Enter Setup** barcode.
2. Scan the **Set the Minimum Length** barcode.
3. Scan the numeric barcode “8” from the “Digit Barcodes” section in Appendix.
4. Scan the **Save** barcode from the “Save/Cancel Barcodes” section in Appendix.
5. Scan the **Set the Maximum Length** barcode.
6. Scan the numeric barcodes “1” and “2” from the “Digit Barcodes” section in Appendix.
7. Scan the **Save** barcode from the “Save/Cancel Barcodes” section in Appendix.
8. Scan the **Exit Setup** barcode.

Rectangular Barcode

Data Matrix has two formats:

Square barcodes having the same amount of modules in length and width: 10*10, 12*12.... 144*144.

Rectangular barcodes having different amounts of models in length and width: 6*16, 6*14...14*22.



**** Enable Rectangular Barcode**



Disable Rectangular Barcode

Data Matrix Inverse

Regular barcode: Dark bars on a bright background.

Inverse barcode: Bright bars on a dark background.



**** Decode Regular Data Matrix Barcodes Only**



Decode Inverse Data Matrix Barcodes Only



Decode Both

DotCode

@DMCDFE0

Disabled

@DMCDFE1

Enabled

High Density

@DMCHDE0

Disable High Density

@DMCHDE1

Enable High Density

Mirror Image



Disable Mirror Image



Enable Mirror Image

Character Encoding



**** Default Character Encoding**



UTF-8

Data Matrix ECI Output



Disable Data Matrix ECI Output



**** Enable Data Matrix ECI Output**

Maxicode

Restore Factory Defaults



Restore the Factory Defaults of Maxicode

Enable/Disable Maxicode



Enable Maxicode



**** Disable Maxicode**



If the engine fails to identify Maxicode barcodes, you may first try this solution by scanning the **Enter Setup** barcode and then **Enable Maxicode** barcode.

Set Length Range for Maxicode

The engine can be configured to only decode Maxicode barcodes with lengths that fall between (inclusive) the minimum and maximum lengths. To accomplish it, you need to set the minimum and maximum lengths.



Set the Minimum Length



Set the Maximum Length



Minimum length is not allowed to be greater than maximum length. If you only want to read Maxicode barcodes with a specific length, set both minimum and maximum lengths to be that desired length.



Set the engine to decode Maxicode barcodes containing between 8 and 12 characters:

1. Scan the **Enter Setup** barcode.
2. Scan the **Set the Minimum Length** barcode.
3. Scan the numeric barcode “8” from the “Digit Barcodes” section in Appendix.
4. Scan the **Save** barcode from the “Save/Cancel Barcodes” section in Appendix.
5. Scan the **Set the Maximum Length** barcode.
6. Scan the numeric barcodes “1” and “2” from the “Digit Barcodes” section in Appendix.
7. Scan the **Save** barcode from the “Save/Cancel Barcodes” section in Appendix.
8. Scan the **Exit Setup** barcode.

Chinese Sensible Code

Restore Factory Defaults



Restore the Factory Defaults of Chinese Sensible Code

Enable/Disable Chinese Sensible Code



Enable Chinese Sensible Code



**** Disable Chinese Sensible Code**



If the engine fails to identify Chinese Sensible Code barcodes, you may first try this solution by scanning the **Enter Setup** barcode and then **Enable Chinese Sensible Code** barcode.

Set Length Range for Chinese Sensible Code

The engine can be configured to only decode Chinese Sensible Code barcodes with lengths that fall between (inclusive) the minimum and maximum lengths. To accomplish it, you need to set the minimum and maximum lengths.

@CSCMIN

Set the Minimum Length

@CSCMAX

Set the Maximum Length

Minimum length is not allowed to be greater than maximum length. If you only want to read Chinese Sensible Code barcodes with a specific length, set both minimum and maximum lengths to be that desired length.

Set the engine to decode Chinese Sensible Code barcodes containing between 8 and 12 characters:

1. Scan the **Enter Setup** barcode.
2. Scan the **Set the Minimum Length** barcode.
3. Scan the numeric barcode “8” from the “Digit Barcodes” section in Appendix.
4. Scan the **Save** barcode from the “Save/Cancel Barcodes” section in Appendix.
5. Scan the **Set the Maximum Length** barcode.
6. Scan the numeric barcodes “1” and “2” from the “Digit Barcodes” section in Appendix.
7. Scan the **Save** barcode from the “Save/Cancel Barcodes” section in Appendix.
8. Scan the **Exit Setup** barcode.

Chinese Sensible Twin Code

Chinese Sensible twin code is 2 Chinese Sensible barcodes paralleled vertically or horizontally. They must both be either regular or inverse barcodes. They must have similar specifications and be placed closely together.

There are 3 options for reading Chinese Sensible twin codes:

- ✧ **Single Chinese Sensible Code Only:** Read either Chinese Sensible code.
- ✧ **Twin Chinese Sensible Code Only:** Read both Chinese Sensible codes. Transmission sequence: left (upper) Chinese Sensible code followed by right (lower) Chinese Sensible code.
- ✧ **Both Single & Twin:** Read both Chinese Sensible codes. If successful, transmit as twin Chinese Sensible Code only. Otherwise, try single Chinese Sensible Code only.



**** Single Chinese Sensible Code Only**



Twin Chinese Sensible Code Only



Both Single & Twin

Chinese Sensible Code Inverse

Regular barcode: Dark bars on a bright background.

Inverse barcode: Bright bars on a dark background.



**** Decode Regular Chinese Sensible Barcodes Only**



Decode Inverse Chinese Sensible Barcodes Only



Decode Both

GM Code

Restore Factory Defaults



Restore the Factory Defaults of GM

Enable/Disable GM



Enable GM



**** Disable GM**



If the engine fails to identify GM barcodes, you may first try this solution by scanning the **Enter Setup** barcode and then **Enable GM** barcode.

Set Length Range for GM

The engine can be configured to only decode GM barcodes with lengths that fall between (inclusive) the minimum and maximum lengths. To accomplish it, you need to set the minimum and maximum lengths.



Set the Minimum Length



Set the Maximum Length



Minimum length is not allowed to be greater than maximum length. If you only want to read GM barcodes with a specific length, set both minimum and maximum lengths to be that desired length.



Set the engine to decode GM barcodes containing between 8 and 12 characters:

1. Scan the **Enter Setup** barcode.
2. Scan the **Set the Minimum Length** barcode.
3. Scan the numeric barcode “8” from the “Digit Barcodes” section in Appendix.
4. Scan the **Save** barcode from the “Save/Cancel Barcodes” section in Appendix.
5. Scan the **Set the Maximum Length** barcode.
6. Scan the numeric barcodes “1” and “2” from the “Digit Barcodes” section in Appendix.
7. Scan the **Save** barcode from the “Save/Cancel Barcodes” section in Appendix.
8. Scan the **Exit Setup** barcode.

Code One

Restore Factory Defaults



Restore the Factory Defaults of Code One

Enable/Disable Code One



Enable Code One



**** Disable Code One**



If the engine fails to identify Code One barcodes, you may first try this solution by scanning the **Enter Setup** barcode and then **Enable Code One** barcode.

Set Length Range for Code One

The engine can be configured to only decode Code One barcodes with lengths that fall between (inclusive) the minimum and maximum lengths. To accomplish it, you need to set the minimum and maximum lengths.



Set the Minimum Length



Set the Maximum Length



Minimum length is not allowed to be greater than maximum length. If you only want to read Code One barcodes with a specific length, set both minimum and maximum lengths to be that desired length.



Set the engine to decode Code One barcodes containing between 8 and 12 characters:

1. Scan the **Enter Setup** barcode.
2. Scan the **Set the Minimum Length** barcode.
3. Scan the numeric barcode “8” from the “Digit Barcodes” section in Appendix.
4. Scan the **Save** barcode from the “Save/Cancel Barcodes” section in Appendix.
5. Scan the **Set the Maximum Length** barcode.
6. Scan the numeric barcodes “1” and “2” from the “Digit Barcodes” section in Appendix.
7. Scan the **Save** barcode from the “Save/Cancel Barcodes” section in Appendix.
8. Scan the **Exit Setup** barcode.

USPS Postnet

Restore Factory Defaults



Restore the Factory Defaults of USPS Postnet

Enable/Disable USPS Postnet



Enable USPS Postnet

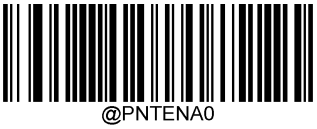

**** Disable USPS Postnet**



If the engine fails to identify USPS Postnet barcodes, you may first try this solution by scanning the **Enter Setup** barcode and then **Enable USPS Postnet** barcode.

Transmit Check Character



Do Not Transmit USPS Postnet Check Character



**** Transmit USPS Postnet Check Character**

USPS Intelligent Mail

Restore Factory Defaults



Restore the Factory Defaults of USPS Intelligent Mail

Enable/Disable USPS Intelligent Mail



Enable USPS Intelligent Mail



**** Disable USPS Intelligent Mail**

If the engine fails to identify USPS Intelligent Mail barcodes, you may first try this solution by scanning the **Enter Setup** barcode and then **Enable USPS Intelligent Mail** barcode.

Royal Mail

Restore Factory Defaults



Restore the Factory Defaults of Royal Mail

Enable/Disable Royal Mail



Enable Royal Mail



**** Disable Royal Mail**



If the engine fails to identify Royal Mail barcodes, you may first try this solution by scanning the **Enter Setup** barcode and then **Enable Royal Mail** barcode.

USPS Planet

Restore Factory Defaults



Restore the Factory Defaults of USPS Planet

Enable/Disable USPS Planet



Enable USPS Planet



**** Disable USPS Planet**



If the engine fails to identify USPS Planet barcodes, you may first try this solution by scanning the **Enter Setup** barcode and then **Enable USPS Planet** barcode.

Transmit Check Character



Do Not Transmit USPS Planet Check Character



**** Transmit USPS Planet Check Character**

KIX Post

Restore Factory Defaults



Restore the Factory Defaults of KIX Post

Enable/Disable KIX Post



Enable KIX Post



**** Disable KIX Post**



If the engine fails to identify KIX Post barcodes, you may first try this solution by scanning the **Enter Setup** barcode and then **Enable KIX Post** barcode.

Australian Postal

Restore Factory Defaults

@APLDEF

Restore the Factory Defaults of Australian Postal

Enable/Disable Australian Postal

@APLENA1

Enable Australian Postal

@APLENA0

**** Disable Australian Postal**

If the engine fails to identify Australian Postal barcodes, you may first try this solution by scanning the **Enter Setup** barcode and then **Enable Australian Postal** barcode.

Japan Post

Restore Factory Defaults



Restore the Factory Defaults of Japan Post

Enable/Disable Japan Post



Enable Japan Post



Disable Japan Post



If the scanner fails to identify Japan Post barcodes, you may first try this solution by scanning the **Enter Setup** barcode and then **Enable Japan Post** barcode.

AI OCR

OCR Output



Filter Line Feed Characters (0xA)



Do not Filter Line Feed Characters (0xA)

OCR Security Level



Level 1



Level 2



Level 3



Level 4

Digimarc

When enabled, the scanner can decode Digimarc codes

Chapter 11 Data Formatter

Introduction

You may use the Data Formatter to modify the engine's output. For example, you can use the Data Formatter to insert characters at certain points in barcode data or to suppress/ replace/ send certain characters in barcode data as it is scanned.

Normally, when you scan a barcode, it gets outputted automatically; however, when you create a format, you must use a "send" command (see the "Send Commands" section in this chapter) within the format programming to output data. Multiple data formats can be programmed into the engine. The maximum size of all data formats created is 2048 characters. By default, the data formatter is disabled. Enable it when required. If you have changed data format settings, and wish to clear all formats and return to the factory defaults, scan the **Default Data Format** code below.



Default Data Format

Add a Data Format

Data format is used to edit barcode data. When you create a data format, you must select one of the four labels (Format_0, Format_1, Format_2 and Format_3) for your data format, specify the application scope of data format (such as barcode type and data length) and include formatter commands. Multiple data formats may be created using the same label. When scanned data does not match your data format requirements, you will hear the non-match error beep (if the non-match error beep is ON).

There are two methods to program a data format: Programming with barcodes and programming with serial commands.

Programming with Barcodes

The following explains how to program a data format by scanning the specific barcodes. Scanning any irrelevant barcode or failing to follow the setting procedure will result in programming failure. To find the alphanumeric barcodes needed to create a data format, see the "Digit Barcodes" section in Appendix.

Step 1: Scan the **Enter Setup** barcode.

Step 2: Scan the **Add Data Format** barcode.



Add Data Format

Step 3: Select a label (Format_0 or Format_1 or Format_2 or Format_3).
Scan a numeric barcode **0** or **1** or **2** or **3** to label this data format Format_0 or Format_1 or Format_2 or Format_3.

Step 4: Select formatter command type.
Specify what type of formatter commands will be used. Scan a numeric barcode “6” to select formatter command type 6. (See the “Formatter Command Type 6” section in this chapter for more information)

Step 5: Set interface type
Scan **999** for any interface type.

Step 6: Set Symbology ID Number
Refer to the “Symbology ID Number” section in Appendix and find the ID number of the symbology to which you want to apply the data format. Scan three numeric barcodes for the symbology ID number. If you wish to create a data format for all symbologies, scan **999**.

Step 7: Set barcode data length
Specify what length of data will be acceptable for this symbology. Scan the four numeric barcodes that represent the data length. 9999 is a universal number, indicating all lengths. For example, 32 characters should be entered as 0032.

Step 8: Enter formatter command
Refer to the “Formatter Command Type 6” section in this chapter. Scan the alphanumeric barcodes that represent the command you need to edit data. For example, when a command is F141, you should scan F141.

Step 9: Scan the **Save** barcode from the “Save/Cancel Barcodes” section in Appendix to save your data format.

Example: Program a Format_0 data format using formatter command type 6, Code 128 containing 10 characters applicable, send all characters followed by “A”.

1. Scan the **Enter Setup** barcode	Enter the Setup mode
2. Scan the **Add Data Format** barcode	Add a data format
3. Scan the **0** barcode	Select Format_0 as the label
4. Scan the **6** barcode	Select formatter command type 6
5. Scan the **9** barcode three times	All interface types applicable
6. Scan the barcodes **002**	Only Code 128 applicable
7. Scan the barcodes **0010**	Only a length of 10 characters applicable
8. Scan the alphanumeric barcodes **F141**	Send all characters followed by “A” (HEX: 41)
9. Scan the **Save** barcode	Save the data format

To streamline the programming process, you may as well generate a batch barcode by inputting the command (e.g. **@DFMADD069990020010F141;**) used to create a data format. See the “Use Batch Barcode” section in Chapter 9 to learn how to put a batch barcode into use.

When creating multiple data formats sharing a label, the formats are separated from each other by a vertical bar (|) in the batch command, e.g. **@DFMADD069990029999F141|069990039999F142|169990049999F143;**.

Programming with Serial Commands

A data format can also be created by serial commands (HEX) sent from the host device. **All commands must be entered in uppercase letters**.

The syntax consists of the following elements:

Prefix: "~<SOH>0000" (HEX: **7E 01 30 30 30 30**), 6 characters.

Storage type: "@" (HEX: **40**) or "#" (HEX: **23**), 1 character. "@" means permanent setting which will not be lost by removing power from the engine or rebooting it; "#" means temporary setting which will be lost by removing power from the engine or rebooting it.

Add Data Format Command: "DFMADD" (HEX: **44 46 4D 41 44 44**), 6 character.

Data format label: "0" (HEX: **30**) or "1" (HEX: **31**) or "2" (HEX: **32**) or "3" (HEX: **33**), 1 character. "0", "1", "2" and "3" represent Format_0, Format_1, Format_2 and Format_3 respectively.

Formatter command type: "6" (HEX: **36**), 1 character.

Interface type: "999" (HEX: **39 39 39**), 3 characters.

Symbology ID Number: The ID number of the symbology to which you want to apply the data format, 3 characters. 999 indicates all symbologies.

Data length: The length of data that will be acceptable for this symbology, 4 characters. 9999 indicates all lengths. For example, 32 characters should be entered as 0032.

Formatter commands: The command string used to edit data. For more information, see the "Formatter Command Type 6" section in this chapter.

Suffix: ";<ETX>" (HEX: **3B 03**), 2 characters.

Example: Program a Format_0 data format using formatter command type 6, Code 128 containing 10 characters applicable, send all characters followed by "A".

Enter: **7E 01 30 30 30 30 40 44 46 4D 41 44 44 30 36 39 39 39 30 30 33 39 39 39 39 46 31 34 31 3B 03**
(~<SOH>0000@DFMADD069990020010F141;<ETX>)

Response: **02 01 30 30 30 30 40 44 46 4D 41 44 44 30 36 39 39 39 30 30 33 39 39 39 39 46 31 34 31 06 3B 03**
(<STX><SOH>0000@DFMADD069990020010F141<ACK>;<ETX>)

When creating multiple data formats sharing a label, the formats are separated from each other by a vertical bar (|) in the serial command.
Example: ~<SOH>0000@DFMADD069990020010F141|069990039999F142|069990049999F143;<ETX>

Enable/Disable Data Formatter

When Data Formatter is disabled, the data format you have enabled becomes invalid.



**** Disable Data Formatter**

You may wish to require the data to conform to a data format you have created. The following settings can be applied to your data format:

Enable Data Formatter, Required, Keep Prefix/Suffix: Scanned data that meets your data format requirements is modified accordingly and gets outputted along with prefixes and suffixes (if prefix and suffix are enabled). Any data that does not match your data format requirements generates an error beep (if Non-Match Error Beep is turned ON) and the data in that barcode is not transmitted.

Enable Data Formatter, Required, Drop Prefix/Suffix: Scanned data that meets your data format requirements is modified accordingly and gets outputted without prefixes and suffixes (even if prefix and suffix are enabled). Any data that does not match your data format requirements generates an error beep (if Non-Match Error Beep is turned ON) and the data in that barcode is not transmitted.

Enable Data Formatter, Not Required, Keep Prefix/Suffix: Scanned data that meets your data format requirements is modified accordingly and gets outputted along with prefixes and suffixes (if prefix and suffix are enabled). Barcode data that does not match your data format requirements is transmitted as read along with prefixes and suffixes (if prefix and suffix are enabled).

Enable Data Formatter, Not Required, Drop Prefix/Suffix: Scanned data that meets your data format requirements is modified accordingly and gets outputted without prefixes and suffixes (even if prefix and suffix are enabled). Barcode data that does not match your data format requirements is transmitted as read along with prefixes and suffixes (if prefix and suffix are enabled).



Enable Data Formatter, Required, Keep Prefix/Suffix



Enable Data Formatter, Required, Drop Prefix/Suffix



Enable Data Formatter, Not Required, Keep Prefix/Suffix



Enable Data Formatter, Not Required, Drop Prefix/Suffix

Non-Match Error Beep

If Non-Match Error Beep is turned ON, the engine generates an error beep when a barcode is encountered that does not match your required data format.



Non-Match Error Beep Off



**** Non-Match Error Beep On**

Data Format Selection

After enabling the Data Formatter, you can select a data format you want to use by scanning the appropriate barcode below.



**** Format_0**



Format_1



Format_2



Format_3

Change Data Format for a Single Scan

You can switch between data formats for a single scan. The next barcode is scanned using the data format selected here, then reverts to the format you have selected above.

For example, you may have set your engine to use the data format you saved as Format_3. You can switch to Format_1 for a single trigger pull by scanning the **Single Scan – Format_1** barcode below. The next barcode that is scanned uses Format_1, then reverts back to Format_3.

Note: This setting will be lost by removing power from the engine, or turning off/ rebooting the device.



Single Scan – Format_0



Single Scan – Format_1



Single Scan – Format_2



Single Scan – Format_3

Clear Data Format

There are two methods to remove data format created from your engine:

Delete one data format: Scan the **Clear One** barcode, a numeric barcode (0-3) and the **Save** barcode. For example, to delete Format_2, you should scan the **Clear One** barcode, the **2** barcode and the **Save** barcode

Delete all data formats: Scan the **Clear All** barcode.



Clear All



Clear One

Query Data Formats

You may scan the appropriate barcode below to get the information of data format(s) created by you or preset by manufacturer. For instance, if you have added Format_0 as per the example in the “Add a Data Format” section in this chapter, scanning the **Query Current Data Formats** barcode, you will get the result: **Data Format0:069990020010F141;**.



Query Current Data Formats



Query Preset Data Formats

Formatter Command Type 6

When working with the Data Formatter, a virtual cursor is moved along your input data string. The following commands are used to both move this cursor to different positions, and to select, replace, and insert data into the final output. For the hex value of ASCII characters involved in the commands, refer to the “ASCII Table” in Appendix.

Send Commands

F1 Send all characters

Syntax=F1xx (xx: The insert character’s hex value)
Include in the output message all of the characters from the input message, starting from current cursor position, followed by an insert character.

F2 Send a number of characters

Syntax=F2nnxx (nn: The numeric value (00-99) for the number of characters; xx: The insert character’s hex value)

Include in the output message a number of characters followed by an insert character. Start from the current cursor position and continue for “nn” characters or through the last character in the input message, followed by character “xx.”

F2 Example: Send a number of characters



Send the first 10 characters from the barcode above, followed by a carriage return.

Command string: **F2100D**

F2 is the “Send a number of characters” command

10 is the number of characters to send

0D is the hex value for a CR

The data is output as: **1234567890**
<CR>

F3 Send all characters up to a particular character

Syntax=F3ssxx (ss: The particular character's hex value; xx: The insert character's hex value)

Include in the output message all characters from the input message, starting with the character at the current cursor position and continuing to, but not including, the particular character "ss," followed by character "xx." The cursor is moved forward to the "ss" character.

F3 Example: Send all characters up to a particular character



Using the barcode above, send all characters up to but not including "D," followed by a carriage return.

Command string: **F3440D**

F3 is the "Send all characters up to a particular character" command

44 is the hex value for a "D"

0D is the hex value for a CR

The data is output as: **1234567890ABC**
<CR>

E9 Send all but the last characters

Syntax=E9nn (nn: The numeric value (00-99) for the number of characters that will not be sent at the end of the message)

Include in the output message all but the last "nn" characters, starting from the current cursor position. The cursor is moved forward to one position past the last input message character included.

F4 Insert a character multiple times

Syntax=F4xxnn (xx: The insert character's hex value; nn: The numeric value (00-99) for the number of times it should be sent)

Send "xx" character "nn" times in the output message, leaving the cursor in the current position.

E9 and F4 Example: Send all but the last characters, followed by 2 tabs



Send all characters except for the last 8 from the barcode above, followed by 2 tabs.

Command string: **E908F40902**

E9 is the “Send all but the last characters” command

08 is the number of characters at the end to ignore

F4 is the “Insert a character multiple times” command

09 is the hex value for a horizontal tab

02 is the number of times the tab character is sent

The data is output as: **1234567890AB<tab><tab>**

B3 Insert symbology name

Insert the name of the barcode’s symbology in the output message, without moving the cursor.

B4 Insert barcode length

Insert the barcode’s length in the output message, without moving the cursor. The length is expressed as a numeric string and does not include leading zeros.

B3 and B4 Example: Insert the symbology name and length



Send the symbology name and length before the barcode data from the barcode above. Break up these insertions with spaces. End with a carriage return.

Command string: **B3F42001B4F42001F10D**

B3 is the “Insert symbology name” command

F4 is the “Insert a character multiple times” command

20 is the hex value for a space

01 is the number of times the space character is sent

B4 is the “Insert barcode length” command

F4 is the “Insert a character multiple times” command

20 is the hex value for a space

01 is the number of times the space character is sent

F1 is the “Send all characters” command

0D is the hex value for a CR

The data is output as: **Code128 20 1234567890ABCDEFGHIJ**
<CR>

Move Commands

F5 Move the cursor forward a number of characters

Syntax=F5nn (nn: The numeric value (00-99) for the number of characters the cursor should be moved ahead)

Move the cursor ahead “nn” characters from current cursor position.

F5 Example: Move the cursor forward and send the data



Move the cursor forward 3 characters, then send the rest of the barcode data from the barcode above. End with a carriage return.

Command string: **F503F10D**

F5 is the “Move the cursor forward a number of characters” command

03 is the number of characters to move the cursor

F1 is the “Send all characters” command

0D is the hex value for a CR

The data is output as: **4567890ABCDEFGHIJ**
<CR>

F6 Move the cursor backward a number of characters

Syntax=F6nn (nn: The numeric value (00-99) for the number of characters the cursor should be moved back)

Move the cursor back “nn” characters from current cursor position.

F7 Move the cursor to the beginning

Syntax＝F7

Move the cursor to the first character in the input message.

EA Move the cursor to the end

Syntax＝EA

Move the cursor to the last character in the input message.

Search Commands

F8 Search forward for a character

Syntax＝F8xx (xx: The search character's hex value)

Search the input message forward for "xx" character from the current cursor position, leaving the cursor pointing to the "xx" character.

F8 Example: Send barcode data that starts after a particular character



Search for the letter "D" in barcodes and send all the data that follows, including the "D". Using the barcode above:

Command string: **F844F10D**

F8 is the "Search forward for a character" command

44 is the hex value for "D"

F1 is the "Send all characters" command

0D is the hex value for a CR

The data is output as: **DEFGHIJ**

<CR>

F9 Search backward for a character

Syntax＝F9xx(xx: The search character's hex value)

Search the input message backward for "xx" character from the current cursor position, leaving the cursor pointing to the "xx" character.

B0 Search forward for a string

Syntax=B0nnnnS (nnnn: The string length (up to 9999); S: The ASCII hex value of each character in the string)

Search forward for “S” string from the current cursor position, leaving cursor pointing to “S” string. For example, B0000454657374 will search forward for the first occurrence of the 4-character string “Test.”

B0 Example: Send barcode data that starts after a string of characters



Search for the letters “FGH” in barcodes and send all the data that follows, including “FGH.” Using the barcode above:

Command string: **B00003464748F10D**

B0 is the “Search forward for a string” command

0003 is the string length (3 characters)

46 is the hex value for “F”

47 is the hex value for “G”

48 is the hex value for “H”

F1 is the “Send all characters” command

0D is the hex value for a CR

The data is output as: **FGHIJ**
<CR>

B1 Search backward for a string

Syntax＝B1nnnnS (nnnn: The string length (up to 9999); S: The ASCII hex value of each character in the string)

Search backward for “S” string from the current cursor position, leaving cursor pointing to “S” string. For example, B1000454657374 will search backward for the first occurrence of the 4-character string “Test.”

E6 Search forward for a non-matching character

Syntax=E6xx (xx: The search character's hex value)

Search the input message forward for the first non-"xx" character from the current cursor position, leaving the cursor pointing to the non-"xx" character.

E6 Example: Remove zeros at the beginning of barcode data



This example shows a barcode that has been zero filled. You may want to ignore the zeros and send all the data that follows. E6 searches forward for the first character that is not zero, then sends all the data after, followed by a carriage return. Using the barcode above:

Command string: **E630F10D**

E6 is the "Search forward for a non-matching character" command

30 is the hex value for 0

F1 is the "Send all characters" command

0D is the hex value for a CR

The data is output as: **37692**

<CR>

E7 Search backward for a non-matching character

Syntax＝E7xx(xx: The search character's hex value)

Search the input message backward for the first non-"xx" character from the current cursor position, leaving the cursor pointing to the non-"xx" character.

Miscellaneous Commands

FB Suppress characters

Syntax＝FBnnxxyy..zz (nn: The numeric value (00-15) for the number of suppressed characters; xxyy..zz: The hex value of the characters to be suppressed)

Suppress all occurrences of up to 15 different characters, starting at the current cursor position, as the cursor is advanced by other commands.

FB Example: Remove spaces in barcode data



This example shows a barcode that has spaces in the data. You may want to remove the spaces before sending the data. Using the barcode above:

Command string: **FB0120F10D**

FB is the “Suppress characters” command

01 is the number of the characters to be suppressed

20 is the hex value for a space

F1 is the “Send all characters” command

0D is the hex value for a CR

The data is output as: **34567890**

<CR>

E4 Replace characters

Syntax＝E4nnxx$_1$xx$_2$yy$_1$yy$_2$…zz$_1$zz$_2$(nn: The total count of the number of characters (characters to be replaced plus replacement characters; xx$_1$: The characters to be replaced, xx$_2$: The replacement characters, continuing through zz$_1$ and zz$_2$)

Replace up to 15 characters in the output message, without moving the cursor.

E4 Example: Replace zeros with CRs in barcode data



If the barcode has characters that the host application does not want included, you can use the E4 command to replace those characters with something else. In this example, you will replace the zeros in the barcode above with carriage returns.

Command string: **E402300DF10D**

E4 is the “Replace characters” command

02 is the total count of characters to be replaced, plus the replacement characters (0 is replaced by CR, so total characters=2)

30 is the hex value for 0

0D is the hex value for a CR (the character that will replace the 0)

F1 is the “Send all characters” command

0D is the hex value for a CR

The data is output as: **1234**
5678
ABC
<CR>

BA Replace a string with another

Syntax＝BAnn$NN_1SS_1NN_2SS_2$

nn: The count of replacements to be made, if nn=00 or nn>=the number of occurrences of a string to be replaced, then replace all occurrences of that string.

NN_1: The length of the string to be replaced, NN_1>0.

SS_1: The ASCII hex value of each character in the string to be replaced.

NN_2: The length of replacement string, NN_2>=0. To replace string "SS_1" with NUL (i.e. delete string "SS_1"), you should set NN_2 to 00 and leave out SS_2.

SS_2: The ASCII hex value of each character in the replacement string.

From the current cursor position, search forward for the occurrence of "SS_1" string (of length "NN_1") and replace the string with "SS_2" string (of length "NN_2") in the output message until every "SS_1" stringis replaced or the count of replacements made reaches "nn" times, without moving the cursor.

BA Example: Replace "23"s with "ABC"s in barcode data



cd123abc23bc12ab232

If the barcode has a string of characters that the host application does not want included, you can use the BA command to replace the string with something else. In this example, you will replace the "23"s in the barcode above with "ABC"s.

Command string: **BA0002323303414243F100**

BA is the "Replace a string with another" command

00 is the count of replacements to be made, 00 means to replace all occurrences of that string

02 is the length of the string to be replaced

32 is the hex value for 2 (character in the string to be replaced)

33 is the hex value for 3 (character in the string to be replaced)

03 is the length of the replacement string

41 is the hex value for A (character in the replacement string)

42 is the hex value for B (character in the replacement string)

43 is the hex value for C (character in the replacement string)

F1 is the “Send all characters” command

00 is the hex value for a NUL

The data is output as: **cd1ABCabcABCbc12abABC2**

BA Example: Remove only the first occurrence of “23”s in barcode data

If the barcode has a string of characters that the host application wants removed, you can use the BA command to replace the string with NUL. In this example, you will remove the first occurrence of “23” in the barcode above.

Command string: **BA0102323300F100**

BA is the “Replace a string with another” command

01 is the count of replacements to be made

02 is the length of the string to be replaced

32 is the hex value for 2 (character in the string to be replaced)

33 is the hex value for 3 (character in the string to be replaced)

00 is the length of the replacement string, 00 means to replace the string to be replaced with NUL

F1 is the “Send all characters” command

00 is the hex value for a NUL

The data is output as: **cd1abc23bc12ab232**

EF Insert a delay

Syntax＝EFnnnn (nnnn: The delay in 5ms increments, up to 9999)

Inserts a delay of up to 49,995 milliseconds (in multiples of 5), starting from the current cursor position. This command can only be used with USB HID Keyboard.

EF Example: Insert a delay of 1s between the 5th and 6th character

Send the first 5 characters in a barcode, wait for 1s, then send the rest of the barcode data.

Command string: **F20500EF0200E900**

F2 is the “Send a number of characters” command

05 is the number of characters to send

00 is the hex value for a Null character

EF is the “Insert a delay” command

0200 is the delay value (5msX200=1000ms=1s)

E9 is the “Send all but the last characters” command

00 is the number of characters that will not be sent at the end of the message

B5 Insert key strokes

Syntax=B5nnssxx (nn: The number of keys pressed (without key modifiers); ss: the key modifier from the table below; xx: the key number from the “Unicode Key Maps” in Appendix.)

Insert a key stroke or combination of key strokes. Key strokes are dependent on your keyboard (see the “Unicode Key Maps” in Appendix). This command can only be used with USB HID Keyboard.

Key Modifiers	
No Key Modifier	00
Shift Left	01
Shift Right	02
Alt Left	04
Alt Right	08
Control Left	10
Control Right	20

For example, B501001F inserts an “a” on a U.S. style keyboard. B5 = the command, 01 = number of keys pressed (without the key modifier), 00 is No Key Modifier, and 1F is the “a” key. If an “A” were to be inserted, B501011F or B501021F would be entered.

If there are two keystrokes, the syntax would change from Syntax=B5nnssxx for one keystroke to Syntax=B5nnssxxssxx. An example that would insert “aA” is as follows: B502001F011F.

Note: Key modifiers can be added together when needed. Example: Shift Left + Alt Left + Control Left =15.

Chapter 12 Prefix & Suffix

Introduction

A 1D barcode could contain digits, letters, symbols, etc. A 2D barcode could contain more data, such as Chinese characters and other multi-byte characters. However, in real applications, they do not and should not have all information we need, such as barcode type, data acquisition time and delimiter, in order to keep the barcodes short and flexible.

Preffix and suffix are how to fulfill the needs mentioned above. They can be added, removed and modified while the original barcode data remains intact.



Barcode processing procedure:

1. Edit data with Data Formatter
2. Append prefix/suffix
3. Pack data
4. Append terminating character

Global Settings

Enable/Disable All Prefixes/Suffixes

Disable All Prefixes/Suffixes: Transmit barcode data with no prefix/suffix.

Enable All Prefixes/Suffixes: Allow to append Code ID prefix, AIM ID prefix, custom prefix/suffix and terminating character to the barcode data before the transmission.



**** Disable All Prefixes/Suffixes**



Enable All Prefixes/Suffixes

Prefix Sequence



**** Code ID+ Custom +AIM ID**



Custom + Code ID + AIM ID

Custom Prefix

Enable/Disable Custom Prefix

If custom prefix is enabled, you are allowed to append to the data a user-defined prefix that cannot exceed 10 characters. For example, if the custom prefix is “AB” and the barcode data is “123”, the Host will receive “AB123”.



**** Disable Custom Prefix**



Enable Custom Prefix

Set Custom Prefix

To set a custom prefix, scan the **Set Custom Prefix** barcode then the numeric barcodes corresponding to the hexadecimal value of a desired prefix then the **Save** barcode.

Note: A custom prefix cannot exceed 10 characters.



Set Custom Prefix

Example

Set the custom prefix to “CODE” (HEX: 0x43/0x4F/0x44/0x45):

1. Scan the **Enter Setup** barcode.
2. Scan the **Set Custom Prefix** barcode.
3. Scan the numeric barcodes “4”, “3”, “4”, “F”, “4”, “4”, “4” and “5” from the “Digit Barcodes” section in Appendix.
4. Scan the **Save** barcode from the “Save/Cancel Barcodes” section in Appendix.
5. Scan the **Enable Custom Prefix** barcode.
6. Scan the **Exit Setup** barcode.

AIM ID Prefix

AIM (Automatic Identification Manufacturers) ID defines symbology identifier (For the details, see the “AIM ID Table” section in Appendix). If AIM ID prefix is enabled, the engine will add the symbology identifier before the scanned data after decoding.



**** Disable AIM ID Prefix**



Enable AIM ID Prefix

AIM ID is not user programmable.

Code ID Prefix

Code ID can also be used to identify barcode type. Unlike AIM ID, Code ID is user programmable. Code ID can only consist of one or two English letters.



**** Disable Code ID Prefix**



Enable Code ID Prefix

Restore All Default Code IDs

For the information of default Code IDs, see the “Code ID Table” section in Appendix.



Restore All Default Code IDs

Modify Code ID

See the examples below to learn how to modify a Code ID and restore the default Code IDs of all symbologies.

Example

Modify PDF417 Code ID to be "p" (HEX: 0x70):

1. Scan the **Enter Setup** barcode.
2. Scan the **Modify PDF417 Code ID** barcode.
3. Scan the numeric barcodes "7" and "0" from the "Digit Barcodes" section in Appendix.
4. Scan the **Save** barcode from the "Save/Cancel Barcodes" section in Appendix.
5. Scan the **Exit Setup** barcode.

Restore the default Code IDs of all symbologies:

1. Scan the **Enter Setup** barcode.
2. Scan the **Restore All Default Code IDs** barcode**.**
3. Scan the **Exit Setup** barcode.

1D symbologies:



Modify Code 128 Code ID



Modify GS1-128 Code ID



Modify EAN-8 Code ID



Modify EAN-13 Code ID



Modify UPC-E Code ID



Modify UPC-A Code ID



Modify Interleaved 2 of 5 Code ID



Modify ITF-14 Code ID



Modify ITF-6 Code ID



Modify Matrix 2 of 5 Code ID



Modify Code 39 Code ID



Modify Codabar Code ID



Modify Code 93 Code ID



Modify China Post 25 Code ID



Modify AIM 128 Code ID



Modify ISBT 128 Code ID



Modify ISSN Code ID



Modify ISBN Code ID



Modify Industrial 25 Code ID



Modify Standard 25 Code ID



Modify Plessey Code ID



Modify Code 11 Code ID



Modify MSI-Plessy Code ID



Modify GS1 Composite Code ID



Modify GS1 Databar Code ID



Modify Code 49 Code ID



Modify Code 16K Code ID

2D symbologies:



Modify PDF417 Code ID



Modify QR Code ID



Modify Aztec Code ID



Modify Data Matrix Code ID



Modify Maxicode Code ID



Modify Chinese Sensible Code ID



Modify GM Code ID



Modify Micro PDF417 Code ID



Modify Micro QR Code ID



Modify Code One Code ID

Postal symbologies:



Modify USPS Postnet Code ID



Modify USPS Inteligent Mail Code ID



Modify Royal Mail Code ID



Modify USPS Planet Code ID



Modify KIX Post Code ID



Modify Australian Postal Code ID

OCR:



Modify Specific OCR-B Code ID



Modify Chinese ID Card OCR Code ID



Modify Passport OCR Code ID



Modify China Travel Permit OCR Code ID

Custom Suffix

Enable/Disable Custom Suffix

If custom suffix is enabled, you are allowed to append to the data a user-defined suffix that cannot exceed 10 characters. For example, if the custom suffix is “AB” and the barcode data is “123”, the Host will receive “123AB”.



**** Disable Custom Suffix**



Enable Custom Suffix

Set Custom Suffix

To set a custom suffix, scan the **Set Custom Suffix** barcode then the numeric barcodes corresponding to the hexadecimal value of a desired suffix then the **Save** barcode.

Note: A custom suffix cannot exceed 10 characters.



Set Custom Suffix

Example

Set the custom suffix to “CODE” (HEX: 0x43/0x4F/0x44/0x45):

1. Scan the **Enter Setup** barcode.
2. Scan the **Set Custom Suffix** barcode.
3. Scan the numeric barcodes “4”, “3”, “4”, “F”, “4”, “4”, “4” and “5” from the “Digit Barcodes” section in Appendix.
4. Scan the **Save** barcode from the “Save/Cancel Barcodes” section in Appendix.
5. Scan the **Enable Custom Suffix** barcode.
6. Scan the **Exit Setup** barcode.

Data Packing

Introduction

Data packing is designed for a specific group of users who want to have the data packed before transmission. Data packing influences data format, so it is advised to disable this feature when it is not required.

Data Packing Options

- **Disable Data Packing:** Transmit decoded data in raw format (unpacketed).
- **Enable Data Packing, Format 1:** Transmit decoded data with the packet format 1 defined below.

  Packet format 1: [STX + ATTR + LEN] + [AL_TYPE + DATA] + [LRC]

  STX: 0x02

  ATTR: 0x00

  LEN: Barcode data length is expressed in 2 bytes ranging from 0x0000 (0) to 0xFFFF (65535).

  AL_TYPE: 0x36

  DATA: Raw barcode data.

  LRC: Check digit.
  LRC calculation algorithm: computation sequence: 0xFF+LEN+AL_TYPE+DATA; computation method is XOR, byte by byte.
- **Enable Data Packing, Format 2:** Transmit decoded data with the packet format 2 defined below.

  Packet format 2: [STX + ATTR + LEN] + [AL_TYPE] + [Symbology_ID + DATA] + [LRC]

  STX: 0x02

  ATTR: 0x00

  LEN: Barcode data length is expressed in 2 bytes ranging from 0x0000 (0) to 0xFFFF (65535).

  AL_TYPE: 0x3B

  Symbology_ID: The ID number of symbology, 1 byte.

  DATA: Raw barcode data.

  LRC: Check digit.
  LRC calculation algorithm: computation sequence: 0xFF+LEN+AL_TYPE+Symbology_ID+DATA; computation method is XOR, byte by byte.



**** Disable Data Packing**



Enable Data Packing, Format 1



Enable Data Packing, Format 2

Terminating Character Suffix

Enable/Disable Terminating Character Suffix

A terminating character such as carriage return (CR) or carriage return/line feed pair (CRLF) can only be used to mark the end of data, which means nothing can be added after it.



Disable Terminating Character Suffix



**** Enable Terminating Character Suffix**

Set Terminating Character Suffix

To set a terminating character suffix, scan the **Set Terminating Character Suffix** barcode then the numeric barcodes corresponding to the hexadecimal value of a desired terminating character then the **Save** barcode.

Note: A terminating character suffix cannot exceed 2 characters.



Set Terminating Character Suffix

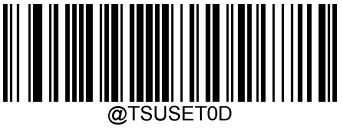

**** Set Terminating Character to CR (0x0D)**



Set Terminating Character to CRLF (0x0D,0x0A)

Example

Set the terminating character suffix to 0x0A:

1. Scan the **Enter Setup** barcode.
2. Scan the **Set Terminating Character Suffix** barcode.
3. Scan the numeric barcodes “0” and “A” from the “Digit Barcodes” section in Appendix.
4. Scan the **Save** barcode from the “Save/Cancel Barcodes” section in Appendix.
5. Scan the **Enable Terminating Character Suffix** barcode.
6. Scan the **Exit Setup** barcode.

Chapter 13 Programming Command

Use of Programming Command

Besides the barcode programming method, the scanner can also be configured by serial commands (HEX) sent from the host device. **All commands must be entered in uppercase letters**.

Command Syntax

Prefix StorageType Tag SubTag {Data} [,SubTag {Data}] [;Tag SubTag {Data}] […] Suffix

Prefix: "~<SOH>0000" (HEX: **7E 01 30 30 30 30**), 6 characters.

StorageType: "@" (HEX: **40**) or "#" (HEX: **23**), 1 character. "@" means permanent setting which will not be lost by removing power from the scanner or rebooting it; "#" means temporary setting which will be lost by removing power from the scanner or rebooting it.

Tag: A 3-character case-sensitive field that identifies the desired command group.

SubTag: A 3-character case-sensitive field that identifies the desired parameter within the tag group. For example, the SubTag for the keyboard layout is CTY.

Data: The value for a feature or parameter setting, identified by the Tag and SubTag.

Suffix: ";<ETX>" (HEX: **3B 03**), 2 characters.

If you need to configure the scanner by serial commands sent from the host device in real time, it is recommended to use the temporary setting with Storage as '#'. The permanent setting with Storage as '@' involves erasing and writing process, which will affect the service life of the flash memory.

Example: Enable Code 128

@128ENA1

Enable Code 128

Storage: @; Tag: 128; SubTag: ENA; Data:1;

Commands will be:

ASCII: ~<SOH> 0000@128ENA1;<ETX>

HEX: 7E 01 30 30 30 30 40 31 32 38 45 4E 41 31 3B 03

Query Commands

In the above command, if Data is one of special characters as below, and the settings of that command to quary **TagSubTag**:

Date	Function
* (HEX: 2A)	Quary current settings
& (HEX: 26)	Quary factory default settings
^ (HEX: 5E)	Quart value range

Still taking the Code128 configuration query as an example, you can send ~<SOH> 0000@128MIN*;<ETX> to query the current minimum length set by Code128, and similarly you can send ~<SOH> 0000@128MIN&;<ETX> or ~<SOH> 0000@128MIN^;<ETX> to query the default minimum length of Code128 or the range of values set by Code128. Code128 default minimum length or a range of values for the Code128 minimum length setting.

If SubTag is omitted, it means to query the settings of all functions under a certain category. For example, to query all current settings of Code 128, you can send ~<SOH> 0000@128*;<ETX>.

If {Tag SubTag} is omitted, it means to query all settings of the device.

For the value range, use '-' to indicate a consecutive range and '|' to separate each value, e.g.: 1|3-5|7|9-20 indicates a range of 17 digits from 1 to 20 except 2, 6 and 8.

Some settings not only allow you to customize a value, but also provide several preset items such as "High", "Medium", "Low", etc. for quick setting. In this case, after the value range, use '_' to separate the preset option from the original range, '|' for each preset item, and ':' for the preset name and preset value.

Responses

The prefic of response is “<STX><SOH>0000” (HEX: 02 01 30 30 30 30).

<ACK> (HEX: 06)	Succeffful operation
<NAK> (HEX: 15)	The value is not in the supported range.
<ENQ> (HEX: 05)	Setting category or function item does not exist.

When the scanner responses, the scanner replies to the command sequence and inserts the status character above directly before each punctuation mark (comma or semicolon) in the command.

Examples

Take the Code128 and Code39 commands for examples.

Send: ~<SOH> 0000@128ENA0,MIN4;C39ENA1;<ETX>
Response: <STX><SOH> 0000@128ENA0<ACK>,MIN4<ACK>;C39ENA1<ACK><ETX>
It shows that Code128 set to disable reading successfully, set the length of minimum value to 4 successfully, and Code39 set to enable reading successfully.

Send: ~<SOH> 0000@128ENA3;<ETX>
Response: <STX><SOH> 0000@128ENA3<NAK>;<ETX>
Indicates that the value of the data of this command is not supported because the DATA of 128ENA can only be 0 or 1.

Send: ~<SOH> 0000@128ENB0;<ETX>
Reply: ~<SOH> 0000@128ENB0<ENQ>;<ETX>
Indicates that the command does not exist.

Read Barcode On/Off

Sending the Read Barcode Off command **~<SOH>0000#SCNENA0;<ETX>** to the scanner can disable it from reading barcode, and the scanner is unable to scan barcode unless you send the Read Barcode On command ~<**SOH**>**0000#SCNEN 1;<ETX>** to it or power cycle it. By default, Read Barcode is On.

Make a Beeping Sound

You may wish to force the scanner to beep upon a command sent from the host. A beeping sound is made to gain a user's attention to an error or other important event.

BEEPONxxxFyyyTnnV (xxx: The desired frequency, 1-20,000Hz; yyy: The desired duration, 1-10,000ms; nn: The desired volume level, 1-20 (lowest-loudest))

Example: Make a 50ms beep at 2,000Hz with volume level set to 20

Enter: ~<SOH>0000#BEEPON2000F50T20V;<ETX>

Response: <STX><SOH>0000#BEEPON2000F50T20V<ACK>;<ETX>

Chapter 14 Batch Programming

Introduction

Batch programming enables users to integrate a batch of commands into a single batch barcode.

Listed below are batch programming rules:

1. Command format: Command + Parameter Value.

2. Each command is terminated by a semicolon (;). Note that there is no space between a command and its terminator semicolon.

3. Use the barcode generator software to generate a 2D batch barcode.

Example: Create a batch barcode for **Illumination Always On**, **Sense Mode**, **Decode Session Timeout** = 2s:

1. Input the commands:

   @ILLSCN2;SCNMOD2;ORTSET2000;

2. Generate a batch barcode.

When setting up the engine with the above configuration, scan the **Enable Batch Barcode** barcode and then the batch barcode generated.

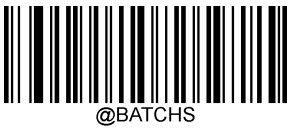

Enable Batch Barcode

Create a Batch Command

A batch command may contain a number of individual commands each of which is terminated by a semicolon (;).

For more information, refer to the “Use of Programming Command” section in Chapter 3.

Create a Batch Barcode

Batch barcodes can be produced in the format of PDF417, QR Code or Data Matrix.

Example: Create a batch barcode for **Illumination Always On**, **Sense Mode**, **Decode Session Timeout** = 2s:

1. Input the following commands:

   @ILLSCN2;SCNMOD2;ORTSET2000;

2. Generate a PDF417 batch barcode.



Use Batch Barcode

To put a batch barcode into use, scan the following barcodes. (Use the example above.)



Enter Setup



Enable Batch Barcode



Batch Barcode



Exit Setup

Appendix

Digit Barcodes

0~9



0



1



2



3



4



5



6



7



8



9

A~F



A



B



C



D



E



F

Save/Cancel Barcodes

After reading numeric barcode(s), you need to scan the **Save** barcode to save the data. If you scan the wrong digit(s), you can either scan the **Cancel** barcode and then start the configuration all over again, or scan the **Delete the Last Digit** barcode and then the correct digit, or scan the **Delete All Digits** barcode and then the digits you want.

For instance, after reading the **Maximum Length** barcode and numeric barcodes “1”, “2” and “3”, you scan:

- **Delete the Last Digit:** The last digit “3” will be removed.
- **Delete All Digits:** All digits “123” will be removed.
- **Cancel:** The maximum length configuration will be cancelled. And the engine is still in the setup mode.



Save



Cancel



Delete the Last Digit



Delete All Digits

Factory Defaults Table

Parameter	Factory Default	Remark
System Settings		
Barcode Programming	Disabled (Exit Setup)	
Programming Barcode Data	Do not transmit	
Communication Interface		
Adaptive Wired Communication	On	
Communication Interface	Serial Port	
RS-232 Interface		
Baud Rate	9600	
Parity Check	None	
Data Bits	8	
Stop Bits	1	
Hardware Auto Flow Control	Disabled	
RS232 Flow Control	Disabled	
USB Interface		
USB Country Keyboard	US keyboard	USB HID Keyboard
Beep on Unknown Character	Off	USB HID Keyboard
Emulate ALT+Keypad	Off	USB HID Keyboard
Code Page	Code Page 1252 (West European Latin)	USB HID Keyboard
Unicode Encoding	Off	USB HID Keyboard
Emulate Keypad with Leading Zero	On	USB HID Keyboard
Function Key Mapping	Disabled	USB HID Keyboard
Inter-Keystroke Delay	No Delay	USB HID Keyboard
Caps Lock	Caps Lock OFF, non-Japanese Keyboard	USB HID Keyboard
Convert Case	No Case Conversion	USB HID Keyboard
Emulate Numeric Keypad 1	Off	USB HID Keyboard
Emulate Numeric Keypad 2	Off	USB HID Keyboard
Fast Mode	Off	USB HID Keyboard

Polling Rate	3ms	USB HID Keyboard
Remove UTF-8 Byte Order Mark (BOM)	Disabled	USB HID Keyboard
Basic Settings		
Scan Mode		
Decode Session Timeout	3000ms	1-3,600,000ms; 0: Infinite
After A Good Read (Sense Mode)	Go into Sensing Status	
Image Stabilization Timeout (Sense Mode)	500ms	0-3,000ms
Sensitivity (Sense Mode)	Medium	
Reading Interval	500ms	
Reread Timeout	Disabled, 1500ms	1-3,600,000ms
Reread Timeout Reset	Off	
Good Read Delay	Disabled, 500ms	1-3,600,000ms
Scanning Preference	Normal Mode	
Decode Central Area	Whole Area Decoding	
Top of Decode Area	0	
Bottom of Decode Area	0	
Left of Decode Area	800	
Right of Decode Area	800	
Image Flipping	Normal	
Transmit Not Good Read Message	Disabled	
Edit NGR Message	NG	
Trigger Commands	Disabled	
Start Scanning Command	<SOH> T <EOT>	
Stop Scanning Command	<SOH> P <EOT>	
Power On LED	On	
Illumination	On	
Illumination Source Combination	Internal Illumination	
External Illumination Pin 1 Polarity	Active High	
External Illumination Pin 2 Polarity	Active High	
External Illumination Pin 3 Polarity	Active High	
Aiming LED	On	

Good Read LED	On	
Good Read LED Duration	20ms	
Power On Beep	On	
Good Read Beep	On	
Good Read Beep Duration	Medium (80ms)	
Good Read Beep Frequency	Medium (2730Hz)	
Good Read Beep Volume	Loud	
Good Read Vibration	Off	
Vibration Signal Output Pin Selection	100ms	
Vibration Duration	No Pin	
Good Read Pin Polarity	Active Low	

Symbologies		
Global Settings		
1D Inverse	Disabled	
Multi-barcodes	Disabled	
Multi-Barcode Reading Preference	Speed Priority	
Minimum Total Number of Decoders	2	1-32
Maximum Total Number of Decoders	2	1-32
Multi-barcode Separator	;	
GS1 2D Barcode Transition	Disabled	
GS1 Digital Link URI	Enabled	
Surround GS1 Application Identifiers (AI's) with Parentheses	Off	
Output GS1 Application Identifier (GS1 AIs)	Off	
Output GS1 Check Character	Off	
Code 128		
Code 128	Enabled	
Maximum Length	127	
Minimum Length	1	
Queit Size	6	
Security Level	1	
EAN-8		
EAN-8	Enabled	
Check Character	Transmit	
2-Digit Add-On Code	Disabled	
5-Digit Add-On Code	Disabled	
Add-On Code	Not Required	
Convert EAN-8 to EAN-13	Disabled	
Security Level	1	
EAN-13		
EAN-13	Enabled	

Check Character	Transmit	
2-Digit Add-On Code	Disabled	
5-Digit Add-On Code	Disabled	
Add-On Code	Not Required	
EAN-13 Beginning with 290 Add-On Code Required	Do Not Require Add-On Code	
EAN-13 Beginning with 378/379 Add-On Code Required	Do Not Require Add-On Code	
EAN-13 Beginning with 414/419 Add-On Code Required	Do Not Require Add-On Code	
EAN-13 Beginning with 434/439 Add-On Code Required	Do Not Require Add-On Code	
EAN-13 Beginning with 977 Add-On Code Required	Do Not Require Add-On Code	
EAN-13 Beginning with 978 Add-On Code Required	Do Not Require Add-On Code	
EAN-13 Beginning with 979 Add-On Code Required	Do Not Require Add-On Code	
Queit Size	6	
Security Level	1	
UPC-E		
UPC-E	Enabled	
UPC-E0	Enabled	
UPC-E1	Disabled	
Check Character	Transmit	
2-Digit Add-On Code	Disabled	
5-Digit Add-On Code	Disabled	
Add-On Code	Not Required	
Transmit Preamble Character	System Character	
Convert UPC-E to UPC-A	Disabled	

Security Level	1	
UPC-A		
UPC-A	Enabled	
Check Character	Transmit	
2-Digit Add-On Code	Disabled	
5-Digit Add-On Code	Disabled	
Add-On Code	Not Required	
Transmit Preamble Character	System Character	
Security Level	1	
Coupon		
UPC-A/EAN-13 with Extended Coupon Code	Disabled	
Coupon GS1 DataBar Output	Disabled	
Interleaved 2 of 5		
Interleaved 2 of 5	Enabled	
Maximum Length	127	
Minimum Length	1	Not less than 1
Check Character Verification	Disabled	
Febraban		
Febraban	Disabled	
Queit Size	6	
Security Level	1	
ITF-14		
ITF-14	Disabled	
Security Level	1	
ITF-6		
ITF-6	Disabled	
Security Level	1	
Matrix 2 of 5		
Matrix 2 of 5	Enabled	
Maximum Length	127	

Minimum Length	1	Not less than 1
Check Character Verification	Disabled	
Security Level	1	
Code 39		
Code 39	Enabled	
Maximum Length	127	
Minimum Length	1	
Check Character Verification	Disabled	
Start/Stop Character	Do not transmit	
Code 39 Full ASCII	Disabled	
Code 32 Pharmaceutical (PARAF)	Disabled	
Code 32 Prefix	Disabled	
Code 32 Start/Stop Character	Do not transmit	
Code 32 Check Character	Do not transmit	
Queit Size	6	
Security Level	1	
Codabar		
Codabar	Enabled	
Maximum Length	127	
Minimum Length	1	
Check Character Verification	Disabled	
Start/Stop Character	Do not transmit	
	ABCD/ABCD	
Security Level	1	
Code 93		
Code 93	Enabled	
Maximum Length	127	
Minimum Length	1	
Check Character Verification	Enable But Do Not Transmit Check Character	
Queit Size	6	

Security Level	1	
China Post 25		
China Post 25	Disabled	
Maximum Length	127	
Minimum Length	1	
Check Character Verification	Disabled	
Security Level	1	
GS1-128 (UCC/EAN-128)		
GS1-128	Enabled	
Maximum Length	127	
Minimum Length	1	
Transmit Check Character		
FNC1 Transmit		
Security Level	1	
GS1 Databar		
GS1 Databar	Enabled	
GS1 Databar Omnidirectional		
GS1 Databar Limited		
GS1 Databar Expand		
Maximum Length		
Minimum Length		
Application Identifier “01”	Transmit	
Security Level	1	
EAN•UCC Composite		
GS1 Composite	Disabled	
UPC/EAN Composite	Disabled	
Code 11		
Code 11	Disabled	
Maximum Length	127	
Minimum Length	1	Not less than 1
Check Character Verification	One Check Character, MOD11	

Check Character	Transmit	
Security Level	1	
ISBN		
ISBN	Enabled	
Set ISBN Format	ISBN-13	
2-Digit Add-On Code	Disabled	
5-Digit Add-On Code	Disabled	
Add-On Code	Not Required	
Security Level	1	
ISSN		
ISSN	Disabled	
2-Digit Add-On Code	Disabled	
5-Digit Add-On Code	Disabled	
Add-On Code	Not Required	
Security Level	1	
Industrial 25		
Industrial 25	Disabled	
Maximum Length	127	
Minimum Length	1	Not less than 1
Check Character Verification	Disabled	
Security Level	1	
Standard 25		
Standard 25	Enabled	
Maximum Length	127	
Minimum Length	1	Not less than 1
Check Character Verification	Disabled	
Security Level	1	
Plessey		
Plessey	Enabled	
Maximum Length	127	
Minimum Length	1	Not less than 1

Check Character Verification	Disabled	
Security Level	1	
MSI-Plessey		
MSI-Plessey	Enabled	
Maximum Length	127	
Minimum Length	1	Not less than 1
Check Character Verification	One Check Character, MOD10	
Check Character	Do Not Transmit	
Security Level	1	
AIM 128		
AIM 128	Enabled	
Maximum Length	127	
Minimum Length	1	
Transmit Check Character		
FNC1 Transmit		
Security Level	1	
ISBT 128		
ISBT 128	Disabled	
Security Level	1	
Code 49		
Code 49	Disabled	
Maximum Length	80	
Minimum Length	1	
Security Level	1	
Code 16K		
Code 16K	Disabled	
Maximum Length	80	
Minimum Length	1	
Security Level	1	
COOP 25		
COOP 25	Disabled	

Maximum Length	80	
Minimum Length	4	
Check Character Verification	Disabled	
Security Level	1	
PDF417		
PDF417	Enabled	
Maximum Length	2710	
Minimum Length	1	
PDF417 Inverse	Decode Regular PDF417 Barcodes	
Character Encoding	Default Character Encoding	
PDF417 ECI Output	Enabled	
Micro PDF417		
Micro PDF417	Disabled	
Maximum Length	366	
Minimum Length	1	
QR Code		
QR Code	Enabled	
Maximum Length	7089	
Minimum Length	1	
QR Twin Code	Single QR Only	
QR Inverse	Decode Regular QR Barcodes	
Character Encoding	Default Character Encoding	
QR ECI Output	Disabled	
Website QR Code	Disabled	
Custom URL QR	HTTP|http	
Micro QR Code		
Micro QR	Enabled	
Maximum Length	35	
Minimum Length	1	
Aztec		
Aztec Code	Disabled	

Maximum Length	3832	
Minimum Length	1	
Character Encoding	Default Character Encoding	
Aztec ECI Output	Enabled	
Aztec Inverse	Decode Regular Aztec Barcodes	
Data Matrix		
Data Matrix	Enabled	
Maximum Length	3116	
Minimum Length	1	
Data Matrix Twin Code	Single Data Matrix Only	
Rectangular Barcode	Enabled	
Data Matrix Inverse	Decode Regular QR Barcodes	
Character Encoding	Default Character Encoding	
Data Matrix ECI Output	Enabled	
High-Density Code	Disabled	
DotCode	Disabled	
Mirrored Code	Disabled	
Maxicode		
Maxicode	Disabled	
Maximum Length	150	
Minimum Length	1	
Chinese Sensible Code		
Chinese Sensible Code	Disabled	
Maximum Length	7827	
Minimum Length	1	
Chinese Sensible Twin Code	Single Chinese Sensible Code Only	
Chinese Sensible Code Inverse	Decode Regular Chinese Sensible Barcodes Only	
GM Code		
GM	Disabled	
Maximum Length	2751	
Minimum Length	1	

Code One		
Code One	Disabled	
Maximum Length	3550	
Minimum Length	1	
DotCode		
DotCode	Disabled	
Maximum Length	1	
Minimum Length	2048	
USPS Postnet		
USPS Postnet	Disabled	
Check Character	Transmit	
USPS Intelligent Mail		
USPS Intelligent Mail	Disabled	
Royal Mail		
Royal Mail	Disabled	
USPS Planet		
USPS Planet	Disabled	
Check Character	Transmit	
KIX Post		
KIX Post	Disabled	
Australian Postal		
Australian Postal	Disabled	
Japan Postal		
Japan Postal	Disabled	
AI OCR		
OCR Ouput	Do Not Filter Line Feed Characters (0xA)	
Security Level	1	
Data Formatter		
Data Formatter	Disabled	
Non-Match Error Beep	On	
Data Format Selection	Format_0	

Prefix & Suffix		
All Prefixes/Suffixes	Disabled	
Prefix Sequence	Code ID+ Custom +AIM ID	
Custom Prefix	Disabled	
AIM ID Prefix	Disabled	
Code ID Prefix	Disabled	
Custom Suffix	Disabled	
Data Packing	Disable Data Packing	
Terminating Character Suffix	Enabled 0x0D (Carriage Return)	

AIM ID Table

Symbology	AIM ID	Possible AIM ID Modifiers (m)
Code 128	]C0	
GS1-128 (UCC/EAN-128)	]C1	
EAN-8	]E4	
EAN-8 with Addon	]E3	
EAN-13	]E0	
EAN-13 with Addon	]E3	
UPC-E	]E0	
UPC-E with Addon	]E3	
UPC-A	]E0	
UPC-A with Addon	]E3	
Interleaved 2 of 5	]Im	0，1，3
ITF-14	]Im	1，3
ITF-6	]Im	1，3
Matrix 2 of 5	]X0	
Code 39	]Am	0，1，3，4，5，7
Codabar	]Fm	0，2，4
Code 93	]G0	
China Post 25	]X0	
AIM 128	]C2	
ISBT 128	]C4	
ISSN	]X0	
ISBN	]X0	
Industrial 25	]S0	
Standard 25	]R0	
Plessey	]P0	
Code 11	]Hm	0，1，3
MSI Plessey	]Mm	0，1
GS1 Composite	]em	0-3
GS1 Databar(RSS）	]e0	
Code 49	]T0	
Code 16K	]K0	
COOP 25	]X0	

PDF417	]Lm	0-2
QR Code	]Qm	0-6
Aztec	]zm	0-9， A-C
Data Matrix	]dm	0-6
Maxicode	]Um	0-3
Chinese Sensible Code	]X0	
GM	]gm	(0~9)
Micro PDF417	]L0	
Micro QR	]Q1	
Code One	]X0	
DotCode	]Jm	0~5
USPS Postnet	]X0	
USPS Inteligent Mail	]X0	
Royal Mail	]X0	
USPS Planet	]X0	
KIX Post	]X0	
Australian Postal	]X0	
Japan Post	]X0	

Note: “m” represents the AIM modifier character. Refer to ISO/IEC 15424:2008 Information technology – Automatic identification and data capture techniques – Data Carrier Identifiers (including Symbology Identifiers) for AIM modifier character details.

Code ID Table

Symbology	Code ID
Code 128	j
GS1-128 (UCC/EAN-128)	j
EAN-8	d
EAN-13	d
UPC-E	c
UPC-A	c
Interleaved 2 of 5	e
ITF-14	e
ITF-6	e
Matrix 2 of 5	v
Code 39	b
Codabar	a
Code 93	i
China Post 25	X
AIM 128	X
ISBT 128	X
ISSN	g
ISBN	B
Industrial 25	I
Standard 25	f
Plessey	n
Code 11	H
MSI Plessey	m
GS1 Composite	y
GS1 Databar (RSS)	R
Code 49	X
Code 16K	X
COOP 25	X
PDF417	r
QR Code	s
Aztec	z
Data Matrix	u

MaxiCode	x
Chinese Sensible Code	h
GM Code	x
Micro PDF417	R
Micro QR	X
Code One	X
DotCode	X
USPS Postnet	P
USPS Intelligent Mail	M
Royal Mail	x
USPS Planet	L
KIX Post	K
Australian Postal	A
Japan Post	J

Symbology ID Number

Symbology	ID Number
Code 128	002
GS1-128 (UCC/EAN-128)	003
EAN-8	004
EAN-13	005
UPC-E	006
UPC-A	007
Interleaved 2 OF 5	008
ITF-14	009
ITF-6	010
Matrix 2 of 5	011
Code 39	013
Codabar	015
Code 93	017
China Post 25	019
AIM 128	020
ISBT 128	021
COOP 25	022
ISSN	023
ISBN	024
Industrial25	025
Standard25	026
Plessey	027
Code11	028
MSI-Plessey	029
GS1 Composite	030
GS1 Databar (RSS)	031
PDF417	032
QR Code	033
Aztec	034
Data Matrix	035
Maxicode	036
Chinese Sensible Code	039

GM Code	040
Micro PDF417	042
Micro QR	043
Code One	048
DotCode	050
USPS Postnet	096
USPS Inteligent Mail	097
Royal Mail	098
USPS Planet	099
KIX Post	100
Australian Postal	101
Japan Post	102
Code 49	132
Code 16K	133

ASCII Table

Hex	Dec	Char
00	0	NUL (Null char.)
01	1	SOH (Start of Header)
02	2	STX (Start of Text)
03	3	ETX (End of Text)
04	4	EOT (End of Transmission)
05	5	ENQ (Enquiry)
06	6	ACK (Acknowledgment)
07	7	BEL (Bell)
08	8	BS (Backspace)
09	9	HT (Horizontal Tab)
0a	10	LF (Line Feed)
0b	11	VT (Vertical Tab)
0c	12	FF (Form Feed)
0d	13	CR (Carriage Return)
0e	14	SO (Shift Out)
0f	15	SI (Shift In)
10	16	DLE (Data Link Escape)
11	17	DC1 (XON) (Device Control 1)
12	18	DC2 (Device Control 2)
13	19	DC3 (XOFF) (Device Control 3)
14	20	DC4 (Device Control 4)
15	21	NAK (Negative Acknowledgment)
16	22	SYN (Synchronous Idle)
17	23	ETB (End of Trans. Block)
18	24	CAN (Cancel)
19	25	EM (End of Medium)
1a	26	SUB (Substitute)
1b	27	ESC (Escape)
1c	28	FS (File Separator)
1d	29	GS (Group Separator)

Hex	Dec	Char
1e	30	RS (Request to Send)
1f	31	US (Unit Separator)
20	32	SP (Space)
21	33	! (Exclamation Mark)
22	34	" (Double Quote)
23	35	# (Number Sign)
24	36	$ (Dollar Sign)
25	37	% (Percent)
26	38	& (Ampersand)
27	39	` (Single Quote)
28	40	((Left/ Opening Parenthesis)
29	41	) (Right/ Closing Parenthesis)
2a	42	* (Asterisk)
2b	43	+ (Plus)
2c	44	, (Comma)
2d	45	- (Minus/ Dash)
2e	46	. (Dot)
2f	47	/ (Forward Slash)
30	48	0
31	49	1
32	50	2
33	51	3
34	52	4
35	53	5
36	54	6
37	55	7
38	56	8
39	57	9
3a	58	: (Colon)
3b	59	; (Semi-colon)
3c	60	< (Less Than)
3d	61	= (Equal Sign)

Hex	Dec	Char
3e	62	> (Greater Than)
3f	63	? (Question Mark)
40	64	@ (AT Symbol)
41	65	A
42	66	B
43	67	C
44	68	D
45	69	E
46	70	F
47	71	G
48	72	H
49	73	I
4a	74	J
4b	75	K
4c	76	L
4d	77	M
4e	78	N
4f	79	O
50	80	P
51	81	Q
52	82	R
53	83	S
54	84	T
55	85	U
56	86	V
57	87	W
58	88	X
59	89	Y
5a	90	Z
5b	91	[(Left/ Opening Bracket)
5c	92	\ (Back Slash)
5d	93	] (Right/ Closing Bracket)

Hex	Dec	Char
5e	94	^ (Caret/ Circumflex)
5f	95	_ (Underscore)
60	96	' (Grave Accent)
61	97	a
62	98	b
63	99	c
64	100	d
65	101	e
66	102	f
67	103	g
68	104	h
69	105	i
6a	106	j
6b	107	k
6c	108	l
6d	109	m
6e	110	n
6f	111	o
70	112	p
71	113	q
72	114	r
73	115	s
74	116	t
75	117	u
76	118	v
77	119	w
78	120	x
79	121	y
7a	122	z
7b	123	{ (Left/ Opening Brace)
7c	124	| (Vertical Bar)
7d	125	} (Right/ Closing Brace)
7e	126	~ (Tilde)
7f	127	DEL (Delete)

Unicode Key Maps

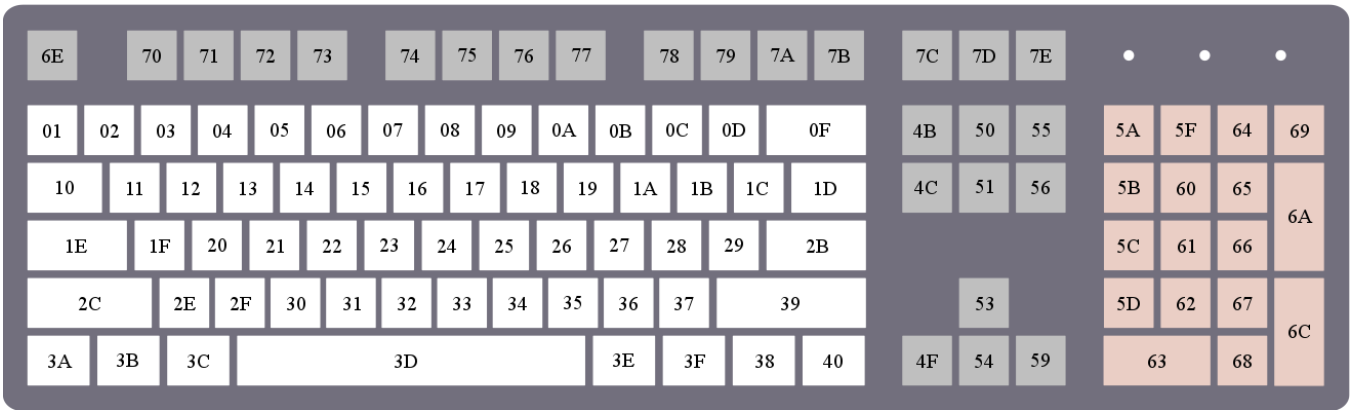

104 Key U.S. Style Keyboard

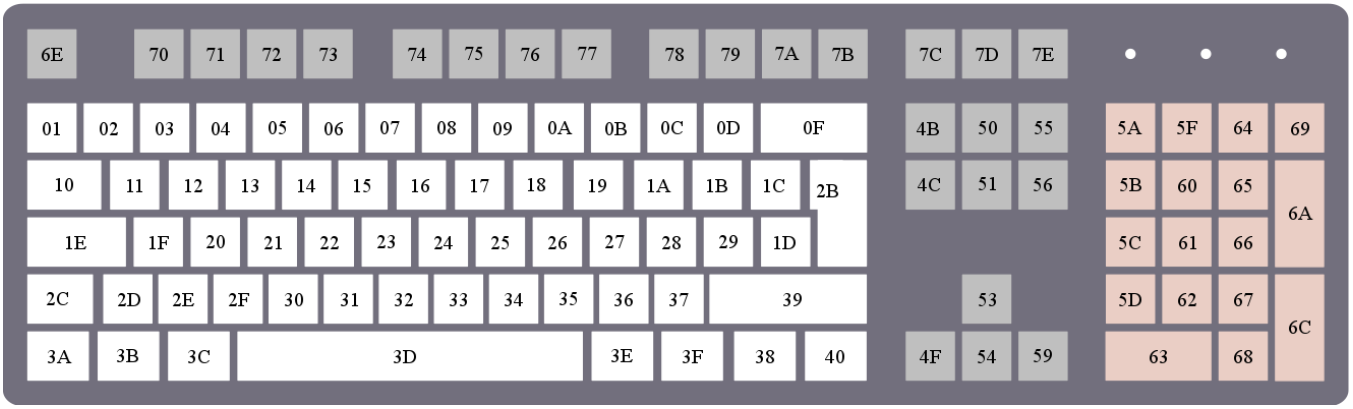

105 Key European Style Keyboard

SCANNING MADE SIMPLE

Newland AIDC EMEA
+31 (0) 345 87 00 33
info@newland-id.com

Rolweg 25
4104 AV Culemborg
The Netherlands